SECTION 2
BRIDGE CIRCUITS
Walt Kester

INTRODUCTION

This section discusses the fundamental concepts of bridge circuits, and is followed by a section on precision op amps (Section 3). Section 4 focuses on the detailed application circuits relating to strain gage-based sensors. Sections 2 and 4 can be read sequentially if the reader already understands the design issues relating to op amps which are covered in Section 3.

Resistive elements are some of the most common sensors. They are inexpensive to manufacture and relatively easy to interface with signal conditioning circuits. Resistive elements can be made sensitive to temperature, strain (by pressure or by flex), and light. Using these basic elements, many complex physical phenomena can be measured; such as fluid or mass flow (by sensing the temperature difference between two calibrated resistances) and dew-point humidity (by measuring two different temperature points), etc.

Sensor elements' resistances can range from less than 100Ω to several hundred kΩ, depending on the sensor design and the physical environment to be measured (See Figure 2.1). For example, RTDs (Resistance Temperature Devices) are typically 100Ω or 1000Ω. Thermistors are typically 3500Ω or higher.

RESISTANCE OF POPULAR SENSORS

■ **Strain Gages**	**120Ω, 350Ω, 3500Ω**
■ **Weigh-Scale Load Cells**	**350Ω - 3500Ω**
■ **Pressure Sensors**	**350Ω - 3500Ω**
■ **Relative Humidity**	**100kΩ - 10MΩ**
■ **Resistance Temperature Devices (RTDs)**	**100Ω , 1000Ω**
■ **Thermistors**	**100Ω - 10MΩ**

Figure 2.1

Resistive sensors such as RTDs and strain gages produce small percentage changes in resistance in response to a change in a physical variable such as temperature or force. Platinum RTDs have a temperature coefficient of about 0.385%/°C. Thus, in order to accurately resolve temperature to 1ºC, the measurement accuracy must be much better than 0.385Ω for a 100Ω RTD.

Strain gages present a significant measurement challenge because the typical change in resistance over the entire operating range of a strain gage may be less than 1% of the nominal resistance value. Accurately measuring small resistance changes is therefore critical when applying resistive sensors.

One technique for measuring resistance (shown in Figure 2.2) is to force a constant current through the resistive sensor and measure the voltage output. This requires both an accurate current source and an accurate means of measuring the voltage. Any change in the current will be interpreted as a resistance change. In addition, the power dissipation in the resistive sensor must be small, in accordance with the manufacturer's recommendations, so that self-heating does not produce errors, therefore the drive current must be small.

MEASURING RESISTANCE INDIRECTLY USING A CONSTANT CURRENT SOURCE

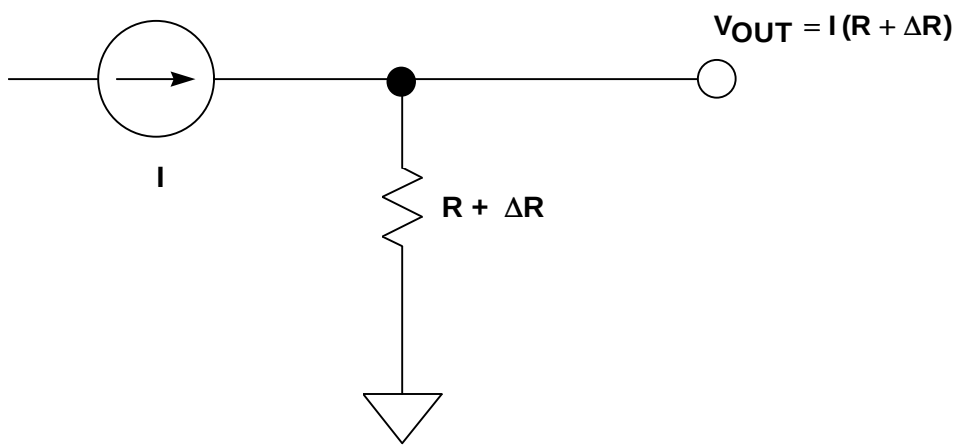

Figure 2.2

Bridges offer an attractive alternative for measuring small resistance changes accurately. The basic Wheatstone bridge (actually developed by S. H. Christie in 1833) is shown in Figure 2.3. It consists of four resistors connected to form a quadrilateral, a source of excitation (voltage or current) connected across one of the diagonals, and a voltage detector connected across the other diagonal. The detector measures the difference between the outputs of two voltage dividers connected across the excitation.

THE WHEATSTONE BRIDGE

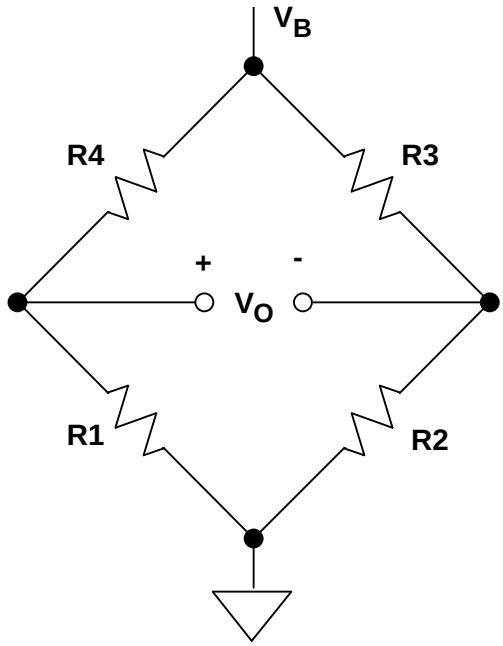

$$V_O = \frac{R1}{R1+R4}V_B - \frac{R2}{R2+R3}V_B$$

$$= \frac{\frac{R1}{R4} - \frac{R2}{R3}}{\left(1+\frac{R1}{R4}\right)\left(1+\frac{R2}{R3}\right)}V_B$$

AT BALANCE,

$$V_O = 0 \quad \text{IF} \quad \frac{R1}{R4} = \frac{R2}{R3}$$

Figure 2.3

A bridge measures resistance indirectly by comparison with a similar resistance. The two principle ways of operating a bridge are as a null detector or as a device that reads a difference directly as voltage.

When R1/R4 = R2/R3, the resistance bridge is at a *null*, irrespective of the mode of excitation (current or voltage, AC or DC), the magnitude of excitation, the mode of readout (current or voltage), or the impedance of the detector. Therefore, if the ratio of R2/R3 is fixed at K, a null is achieved when R1 = K·R4. If R1 is unknown and R4 is an accurately determined variable resistance, the magnitude of R1 can be found by adjusting R4 until null is achieved. Conversely, in sensor-type measurements, R4 may be a fixed reference, and a null occurs when the magnitude of the external variable (strain, temperature, etc.) is such that R1 = K·R4.

Null measurements are principally used in feedback systems involving electromechanical and/or human elements. Such systems seek to force the active element (strain gage, RTD, thermistor, etc.) to balance the bridge by influencing the parameter being measured.

For the majority of sensor applications employing bridges, however, the deviation of one or more resistors in a bridge from an initial value is measured as an indication of the magnitude (or a change) in the measured variable. In this case, the output voltage change is an indication of the resistance change. Because very small resistance changes are common, the output voltage change may be as small as tens of millivolts, even with V_B = 10V (a typical excitation voltage for a load cell application).

In many bridge applications, there may be two, or even four elements which vary. Figure 2.4 shows the four commonly used bridges suitable for sensor applications and the corresponding equations which relate the bridge output voltage to the excitation voltage and the bridge resistance values. In this case, we assume a constant voltage drive, V_B. Note that since the bridge output is directly proportional to V_B, the measurement accuracy can be no better than that of the accuracy of the excitation voltage.

OUTPUT VOLTAGE AND LINEARITY ERROR FOR CONSTANT VOLTAGE DRIVE BRIDGE CONFIGURATIONS

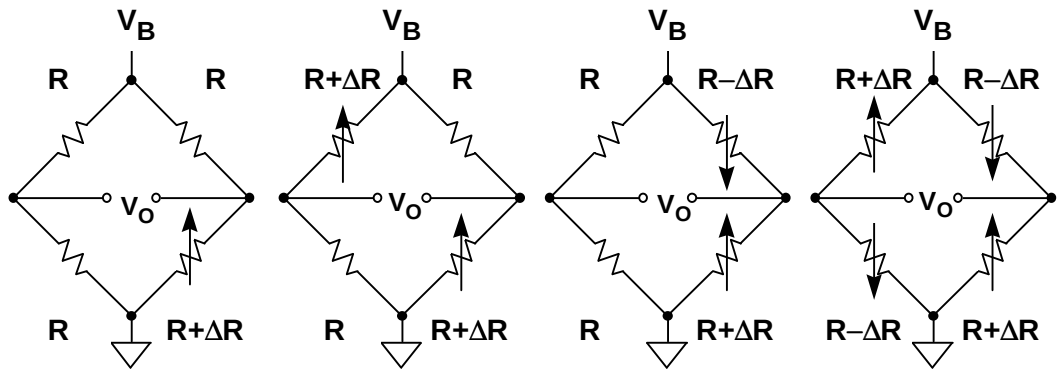

	(A) Single-Element Varying	(B) Two-Element Varying (1)	(C) Two-Element Varying (2)	(D) All-Element Varying
V_O:	$\frac{V_B}{4}\left[\frac{\Delta R}{R + \frac{\Delta R}{2}}\right]$	$\frac{V_B}{2}\left[\frac{\Delta R}{R + \frac{\Delta R}{2}}\right]$	$\frac{V_B}{2}\left[\frac{\Delta R}{R}\right]$	$V_B\left[\frac{\Delta R}{R}\right]$
Linearity Error:	0.5%/%	0.5%/%	0	0

Figure 2.4

In each case, the value of the fixed bridge resistor, R, is chosen to be equal to the nominal value of the variable resistor(s). The deviation of the variable resistor(s) about the nominal value is proportional to the quantity being measured, such as strain (in the case of a strain gage) or temperature (in the case of an RTD).

The *sensitivity* of a bridge is the ratio of the maximum expected change in the output voltage to the excitation voltage. For instance, if V_B = 10V, and the fullscale bridge output is 10mV, then the sensitivity is 1mV/V.

The *single-element varying* bridge is most suited for temperature sensing using RTDs or thermistors. This configuration is also used with a single resistive strain gage. All the resistances are nominally equal, but one of them (the sensor) is variable by an amount ΔR. As the equation indicates, the relationship between the bridge output and ΔR is not linear. For example, if R = 100Ω and ΔR = 0.1Ω (0.1%

change in resistance), the output of the bridge is 2.49875mV for V_B = 10V. The error is 2.50000mV – 2.49875mV, or 0.00125mV. Converting this to a % of fullscale by dividing by 2.5mV yields an end-point linearity error in percent of approximately 0.05%. (Bridge end-point linearity error is calculated as the worst error in % FS from a straight line which connects the origin and the end point at FS, i.e. the FS gain error is not included). If $\Delta R = 1\Omega$, (1% change in resistance), the output of the bridge is 24.8756mV, representing an end-point linearity error of approximately 0.5%. The end-point linearity error of the single-element bridge can be expressed in equation form:

Single-Element Varying
Bridge End-Point Linearity Error $\approx$ % Change in Resistance ÷ 2

It should be noted that the above nonlinearity refers to the nonlinearity of the bridge itself and not the sensor. In practice, most sensors exhibit a certain amount of their own nonlinearity which must be accounted for in the final measurement.

In some applications, the bridge nonlinearity may be acceptable, but there are various methods available to linearize bridges. Since there is a fixed relationship between the bridge resistance change and its output (shown in the equations), software can be used to remove the linearity error in digital systems. Circuit techniques can also be used to linearize the bridge output directly, and these will be discussed shortly.

There are two possibilities to consider in the case of the two-element varying bridge. In the first, Case (1), both elements change in the same direction, such as two identical strain gages mounted adjacent to each other with their axes in parallel.

The nonlinearity is the same as that of the single-element varying bridge, however the gain is twice that of the single-element varying bridge. The two-element varying bridge is commonly found in pressure sensors and flow meter systems.

A second configuration of the two-element varying bridge, Case (2), requires two identical elements that vary in *opposite* directions. This could correspond to two identical strain gages: one mounted on top of a flexing surface, and one on the bottom. Note that this configuration is linear, and like two-element Case (1), has twice the gain of the single-element configuration. Another way to view this configuration is to consider the terms $R+\Delta R$ and $R-\Delta R$ as comprising the two sections of a center-tapped potentiometer.

The *all-element varying* bridge produces the most signal for a given resistance change and is inherently linear. It is an industry-standard configuration for load cells which are constructed from four identical strain gages.

Bridges may also be driven from constant current sources as shown in Figure 2.5. Current drive, although not as popular as voltage drive, has an advantage when the bridge is located remotely from the source of excitation because the wiring resistance does not introduce errors in the measurement. Note also that with constant current excitation, all configurations are linear with the exception of the single-element varying case.

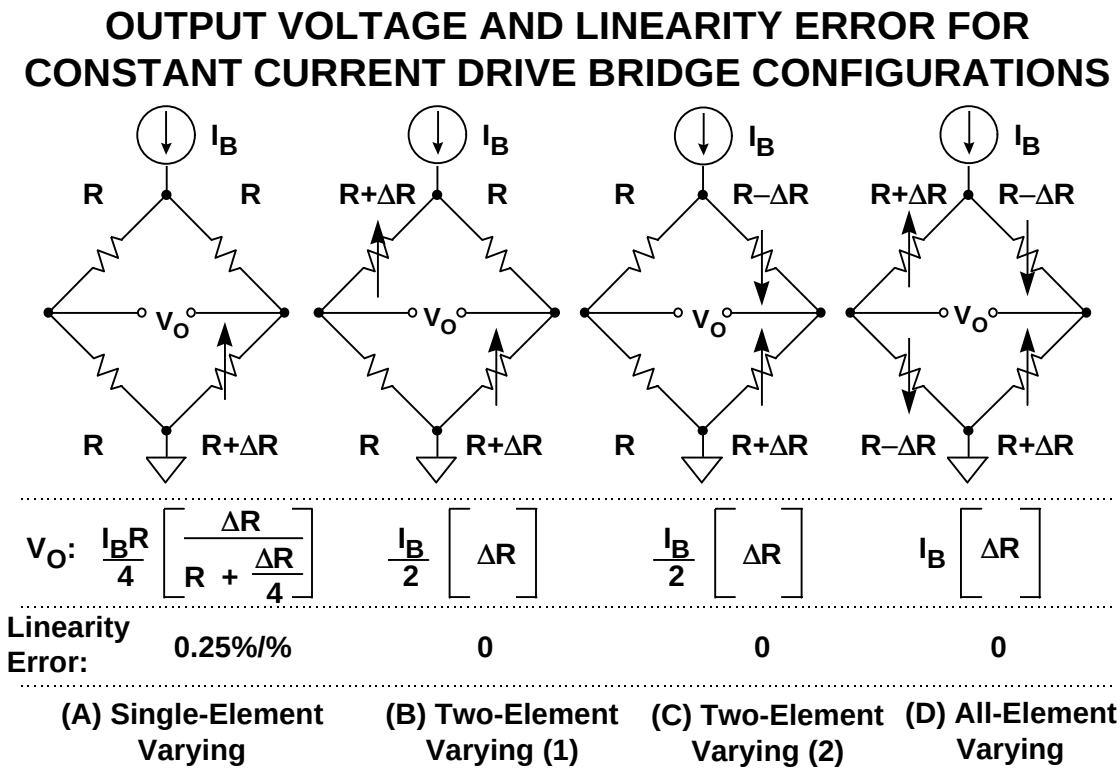

Figure 2.5

In summary, there are many design issues relating to bridge circuits. After selecting the basic configuration, the excitation method must be determined. The value of the excitation voltage or current must first be determined. Recall that the fullscale bridge output is directly proportional to the excitation voltage (or current). Typical bridge sensitivites are 1mV/V to 10mV/V. Although large excitation voltages yield proportionally larger fullscale output voltages, they also result in higher power dissipation and the possibility of sensor resistor self-heating errors. On the other hand, low values of excitation voltage require more gain in the conditioning circuits and increase the sensitivity to noise.

Regardless of its value, the stability of the excitation voltage or current directly affects the overall accuracy of the bridge output. Stable references and/or ratiometric techniques are required to maintain desired accuracy.

BRIDGE CONSIDERATIONS

- **Selecting Configuration (1, 2, 4 - Element Varying)**
- **Selection of Voltage or Current Excitation**
- **Stability of Excitation Voltage or Current**
- **Bridge Sensitivity: FS Output / Excitation Voltage**
  1mV / V to 10mV / V Typical
- **Fullscale Bridge Outputs: 10mV - 100mV Typical**
- **Precision, Low Noise Amplification / Conditioning**
  Techniques Required
- **Linearization Techniques May Be Required**
- **Remote Sensors Present Challenges**

Figure 2.6

AMPLIFYING AND LINEARIZING BRIDGE OUTPUTS

The output of a single-element varying bridge may be amplified by a single precision op-amp connected in the inverting mode as shown in Figure 2.7. This circuit, although simple, has poor gain accuracy and also unbalances the bridge due to loading from R_F and the op amp bias current. The R_F resistors must be carefully chosen and matched to maximize the common mode rejection (CMR). Also it is difficult to maximize the CMR while at the same time allowing different gain options. In addition, the output is nonlinear. The key redeeming feature of the circuit is that it is capable of single supply operation and requires a single op amp. Note that the R_F resistor connected to the non-inverting input is returned to $V_S/2$ (rather than ground) so that both positive and negative values of ΔR can be accommodated, and the op amp output is referenced to $V_S/2$.

A much better approach is to use an instrumentation amplifier (in-amp) as shown in Figure 2.8. This efficient circuit provides better gain accuracy (usually set with a single resistor, R_G) and does not unbalance the bridge. Excellent common mode rejection can be achieved with modern in-amps. Due to the bridge's intrinsic characteristics, the output is nonlinear, but this can be corrected in the software (assuming that the in-amp output is digitized using an analog-to-digital converter and followed by a microcontroller or microprocessor). Instrumentation amplifiers such as the AD620, AD623, and AD627 can be used in single supply applications provided the restrictions on the gain and input and output voltage swings are observed. (For a detailed discussion of these important considerations, see Section 3).

USING A SINGLE OP AMP AS A BRIDGE AMPLIFIER FOR A SINGLE-ELEMENT VARYING BRIDGE

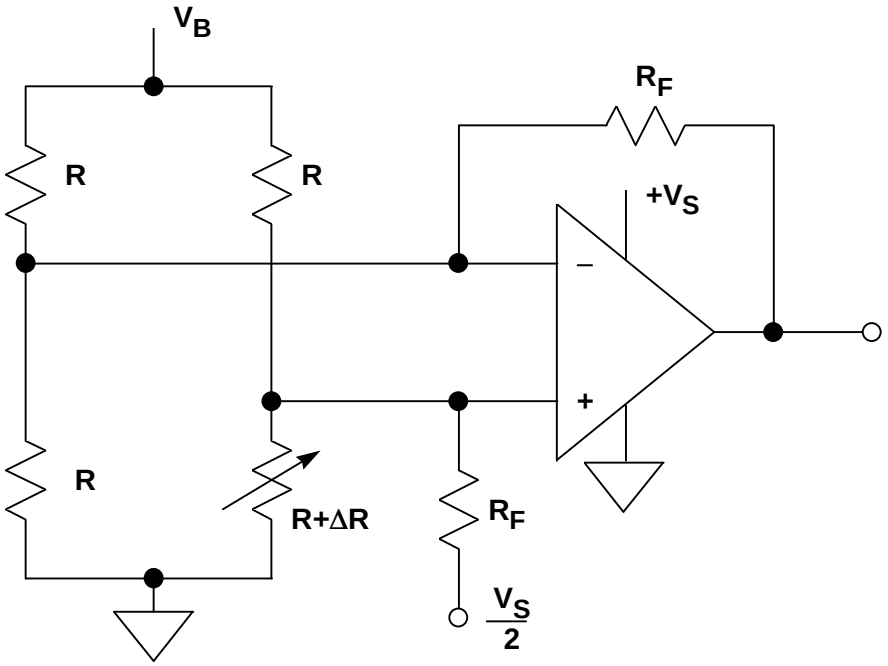

Figure 2.7

USING AN INSTRUMENTATION AMPLIFIER WITH A SINGLE-ELEMENT VARYING BRIDGE

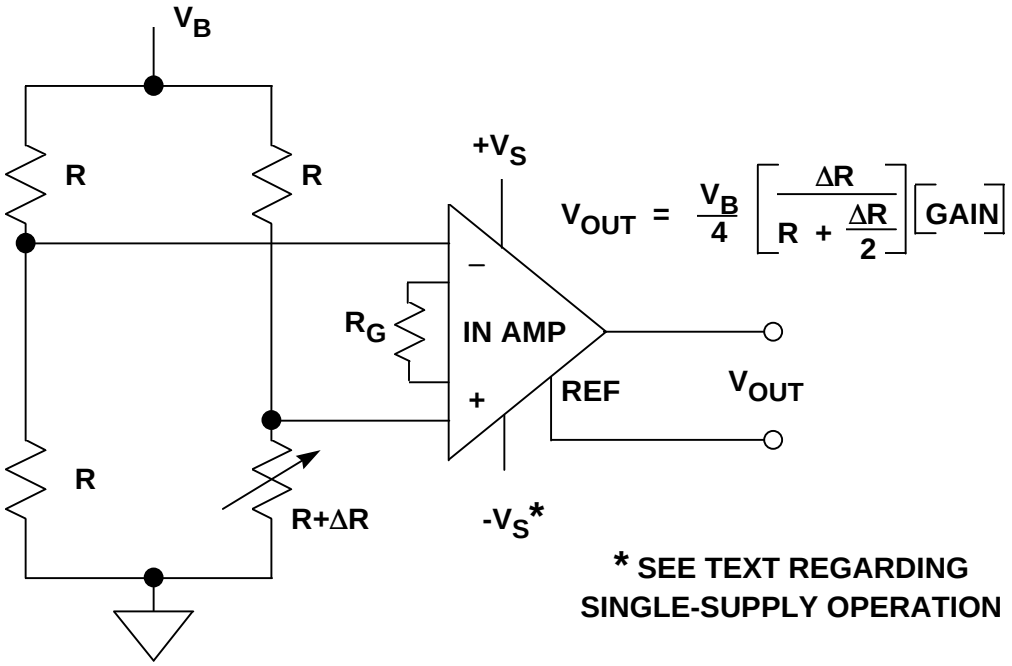

Figure 2.8

Various techniques are available to linearize bridges, but it is important to distinguish between the linearity of the bridge equation and the linearity of the sensor response to the phenomenon being sensed. For example, if the active element is an RTD, the bridge used to implement the measurement might have perfectly adequate linearity; yet the output could still be nonlinear due to the RTD's nonlinearity. Manufacturers of sensors employing bridges address the nonlinearity issue in a variety of ways, including keeping the resistive swings in the bridge small, shaping complimentary nonlinear response into the active elements of the bridge, using resistive trims for first-order corrections, and others.

Figure 2.9 shows a single-element varying active bridge in which an op amp produces a forced null, by adding a voltage in series with the variable arm. That voltage is equal in magnitude and opposite in polarity to the incremental voltage across the varying element and is linear with ΔR. Since it is an op amp output, it can be used as a low impedance output point for the bridge measurement. This active bridge has a gain of two over the standard single-element varying bridge, and the output is linear, even for large values of ΔR. Because of the small output signal, this bridge must usually be followed by an second amplifier. The amplifier used in this circuit requires dual supplies because its output must go negative.

LINEARIZING A SINGLE-ELEMENT VARYING BRIDGE METHOD 1

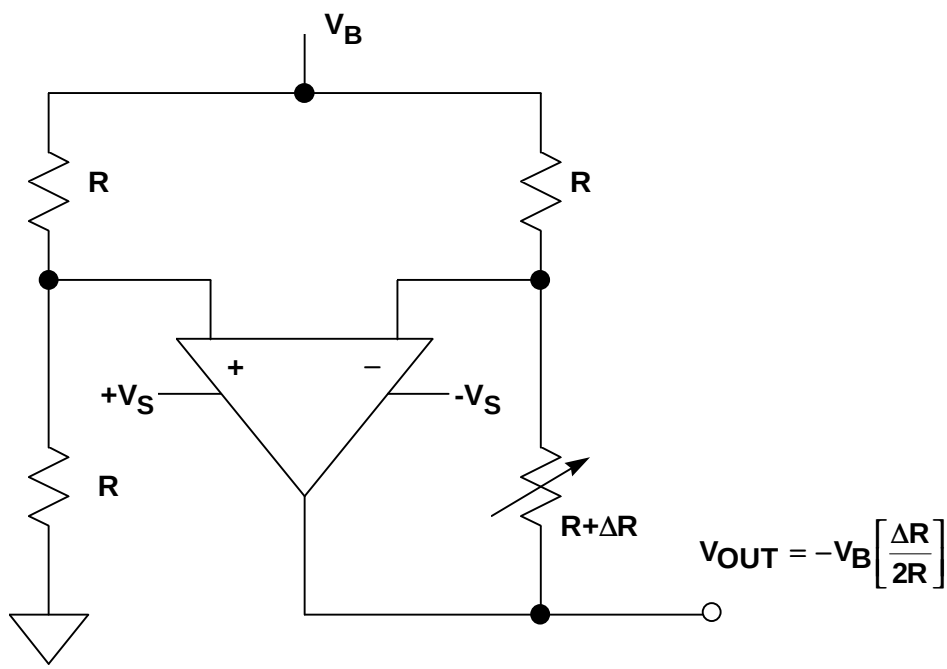

Figure 2.9

Another circuit for linearizing a single-element varying bridge is shown in Figure 2.10. The bottom of the bridge is driven by an op amp, which maintains a constant current in the varying resistance element. The output signal is taken from the right-hand leg of the bridge and amplified by a non-inverting op amp. The output is linear, but the circuit requires two op amps which must operate on dual supplies. In addition, R1 and R2 must be matched for accurate gain.

LINEARIZING A SINGLE-ELEMENT VARYING BRIDGE METHOD 2

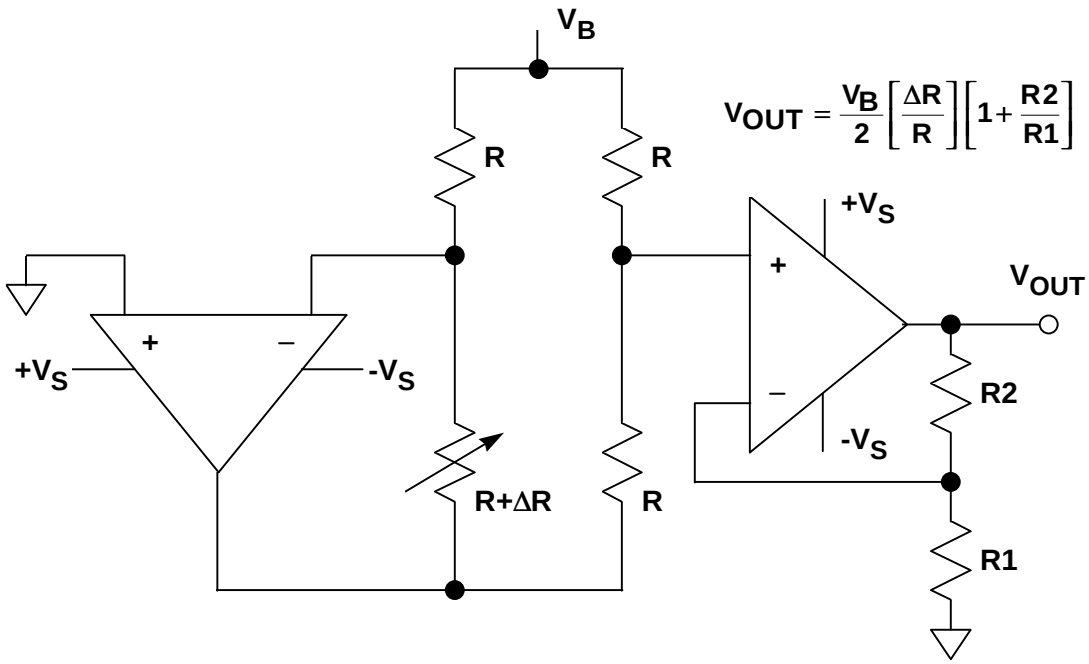

Figure 2.10

A circuit for linearizing a voltage-driven two-element varying bridge is shown in Figure 2.11. This circuit is similar to Figure 2.9 and has twice the sensitivity. A dual supply op amp is required. Additional gain may be necessary.

LINEARIZING A TWO-ELEMENT VARYING BRIDGE METHOD 1 (CONSTANT VOLTAGE DRIVE)

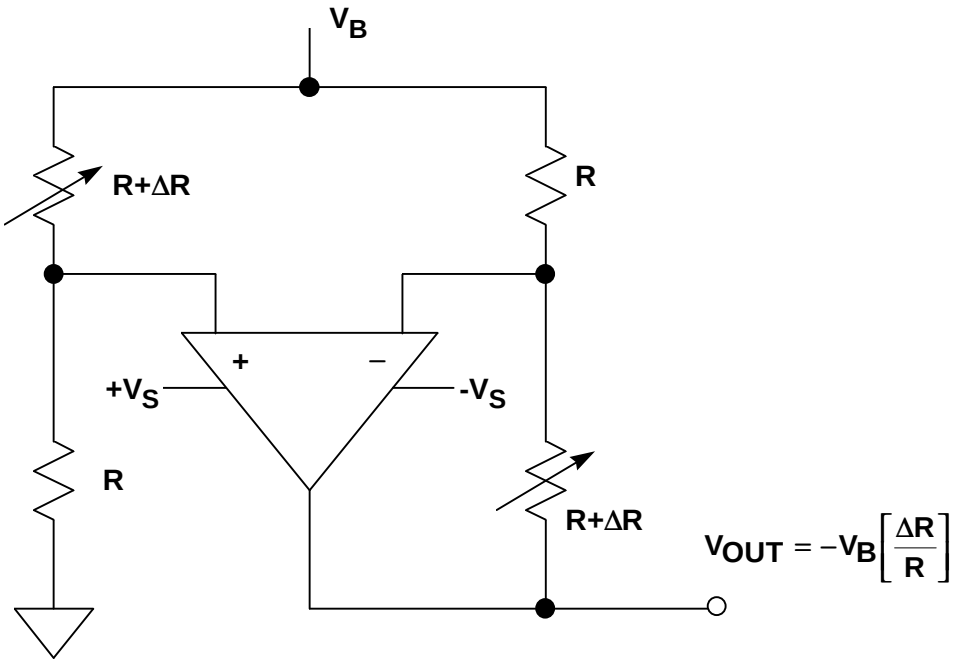

Figure 2.11

The two-element varying bridge circuit in Figure 2.12 uses an op amp, a sense resistor, and a voltage reference to maintain a constant current through the bridge ($I_B = V_{REF}/R_{SENSE}$). The current through each leg of the bridge remains constant ($I_B/2$) as the resistances change, therefore the output is a linear function of ΔR. An instrumentation amplifier provides the additional gain. This circuit can be operated on a single supply with the proper choice of amplifiers and signal levels.

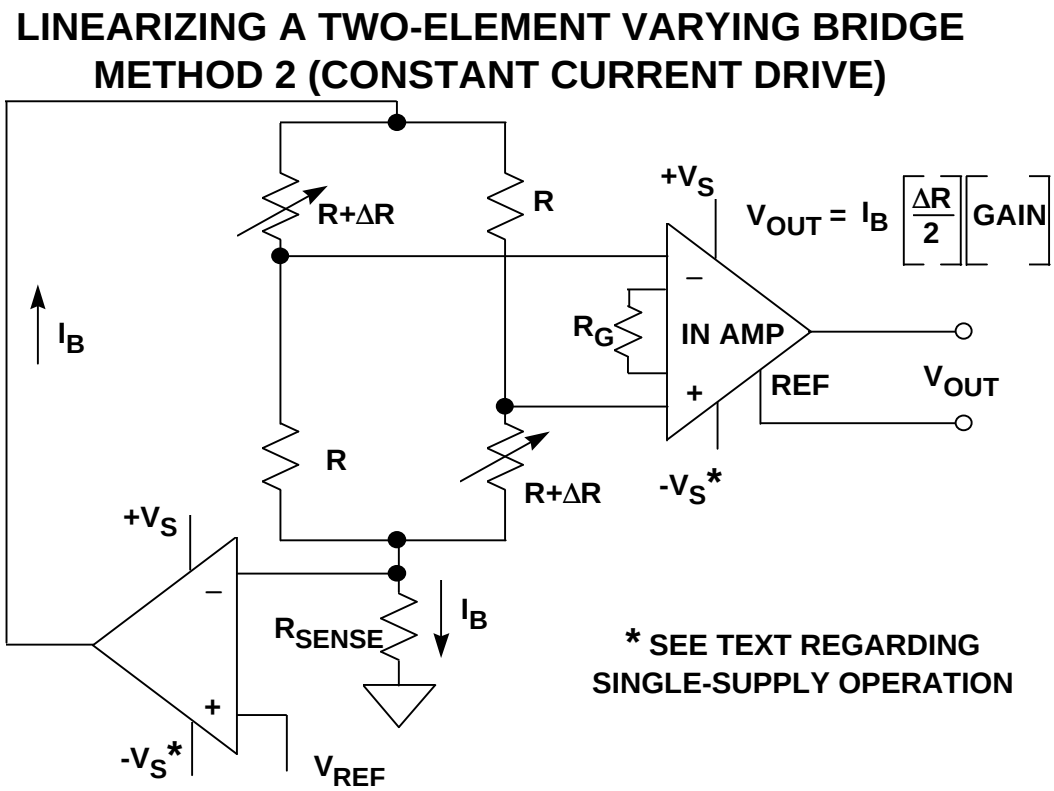

Figure 2.12

DRIVING BRIDGES

Wiring resistance and noise pickup are the biggest problems associated with remotely located bridges. Figure 2.13 shows a 350Ω strain gage which is connected to the rest of the bridge circuit by 100 feet of 30 gage twisted pair copper wire. The resistance of the wire at 25ºC is 0.105Ω/ft, or 10.5Ω for 100ft. The total lead resistance in series with the 350Ω strain gage is therefore 21Ω. The temperature coefficient of the copper wire is 0.385%/ºC. Now we will calculate the gain and offset error in the bridge output due to a +10ºC temperature rise in the cable. These calculations are easy to make, because the bridge output voltage is simply the difference between the output of two voltage dividers, each driven from a +10V source.

ERRORS PRODUCED BY WIRING RESISTANCE FOR REMOTE RESISTIVE BRIDGE SENSOR

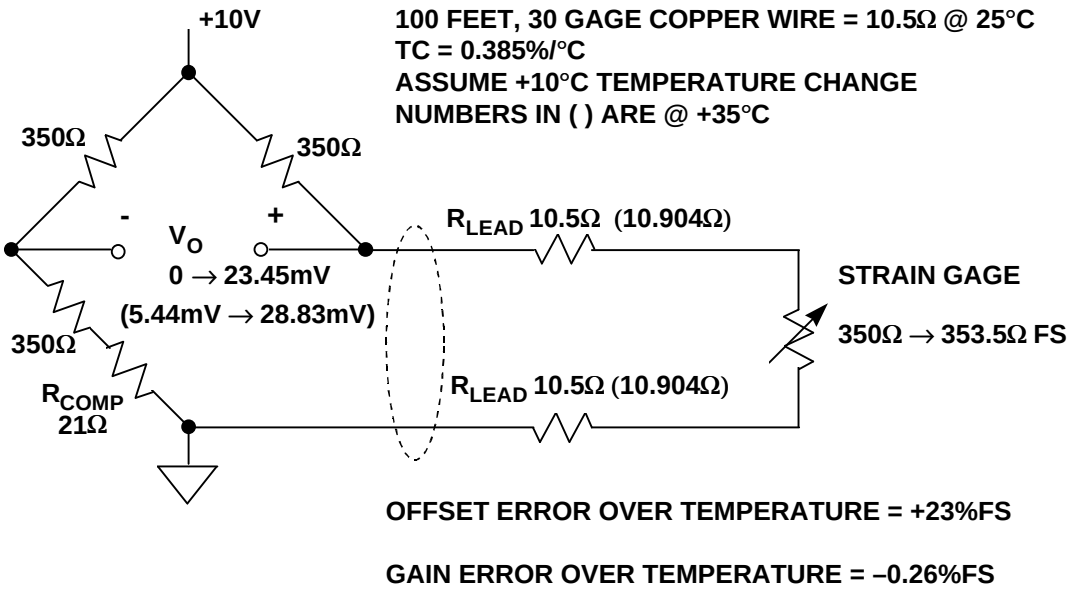

Figure 2.13

The fullscale variation of the strain gage resistance (with flex) above its nominal 350Ω value is +1% (+3.5Ω), corresponding to a fullscale strain gage resistance of 353.5Ω which causes a bridge output voltage of +23.45mV. Notice that the addition of the 21Ω R_{COMP} resistor compensates for the wiring resistance and balances the bridge when the strain gage resistance is 350Ω. Without R_{COMP}, the bridge would have an output offset voltage of 145.63mV for a nominal strain gage resistance of 350Ω. This offset could be compensated for in software just as easily, but for this example, we chose to do it with R_{COMP}.

Assume that the cable temperature increases +10ºC above nominal room temperature. This results in a total lead resistance increase of +0.404Ω (10.5Ω×0.00385/ºC×10ºC) in each lead. *Note: The values in parentheses in the diagram indicate the values at +35ºC.* The total additional lead resistance (of the two leads) is +0.808Ω. With no strain, this additional lead resistance produces an offset of +5.44mV in the bridge output. Fullscale strain produces a bridge output of +28.83mV (a change of +23.39mV from no strain). Thus the increase in temperature produces an offset voltage error of +5.44mV (+23% fullscale) and a gain error of –0.06mV (23.39mV – 23.45mV), or –0.26% fullscale. Note that these errors are produced solely by the 30 gage wire, and do not include any temperature coefficient errors in the strain gage itself.

The effects of wiring resistance on the bridge output can be minimized by the 3-wire connection shown in Figure 2.14. We assume that the bridge output voltage is measured by a high impedance device, therefore there is no current in the sense lead. Note that the sense lead measures the voltage output of a divider: the top half is the bridge resistor plus the lead resistance, and the bottom half is strain gage resistance plus the lead resistance. The nominal sense voltage is therefore

independent of the lead resistance. When the strain gage resistance increases to fullscale (353.5Ω), the bridge output increases to +24.15mV.

Increasing the temperature to +35ºC increases the lead resistance by +0.404Ω in each half of the divider. The fullscale bridge output voltage decreases to +24.13mV because of the small loss in sensitivity, but there is no offset error. The gain error due to the temperature increase of +10ºC is therefore only –0.02mV, or –0.08% of fullscale. Compare this to the +23% fullscale offset error and the –0.26% gain error for the two-wire connection shown in Figure 2.13.

3-WIRE CONNECTION TO REMOTE BRIDGE ELEMENT (SINGLE-ELEMENT VARYING)

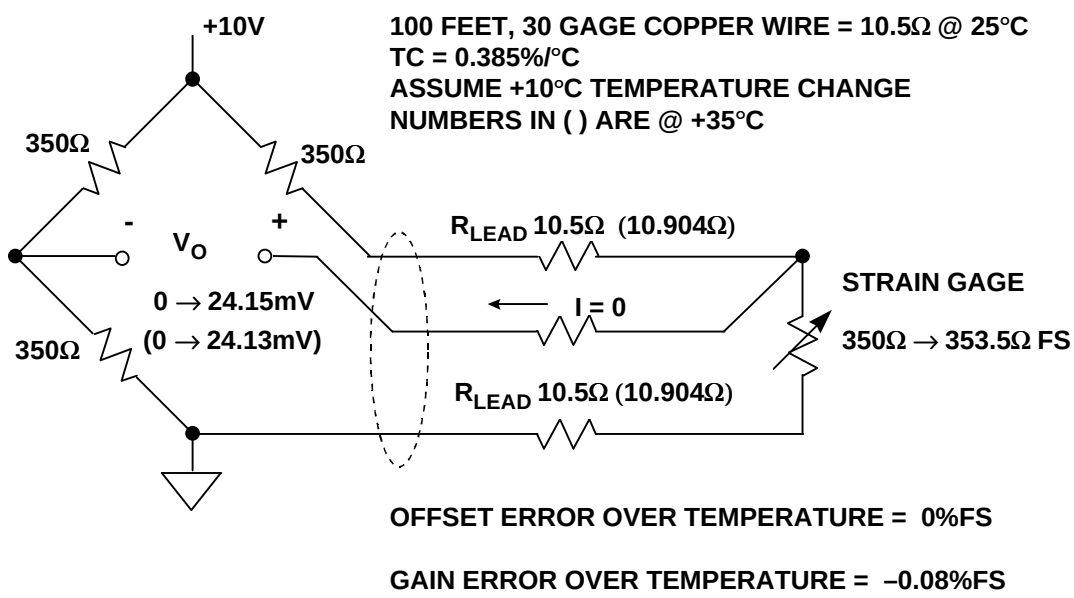

Figure 2.14

The three-wire method works well for remotely located resistive elements which make up one leg of a single-element varying bridge. However, all-element varying bridges generally are housed in a complete assembly, as in the case of a load cell. When these bridges are remotely located from the conditioning electronics, special techniques must be used to maintain accuracy.

Of particular concern is maintaining the accuracy and stability of the bridge excitation voltage. The bridge output is directly proportional to the excitation voltage, and any drift in the excitation voltage produces a corresponding drift in the output voltage.

For this reason, most all-element varying bridges (such as load cells) are six-lead assemblies: two leads for the bridge output, two leads for the bridge excitation, and two *sense* leads. This method (called Kelvin or 4-wire sensing) is shown in Figure 2.15. The sense lines go to high impedance op amp inputs, thus there is minimal error due to the bias current induced voltage drop across their lead resistance. The op amps maintain the required excitation voltage to make the voltage measured between the sense leads always equal to V_B. Although Kelvin sensing eliminates

errors due to voltage drops in the wiring resistance, the drive voltages must still be highly stable since they directly affect the bridge output voltage. In addition, the op amps must have low offset, low drift, and low noise.

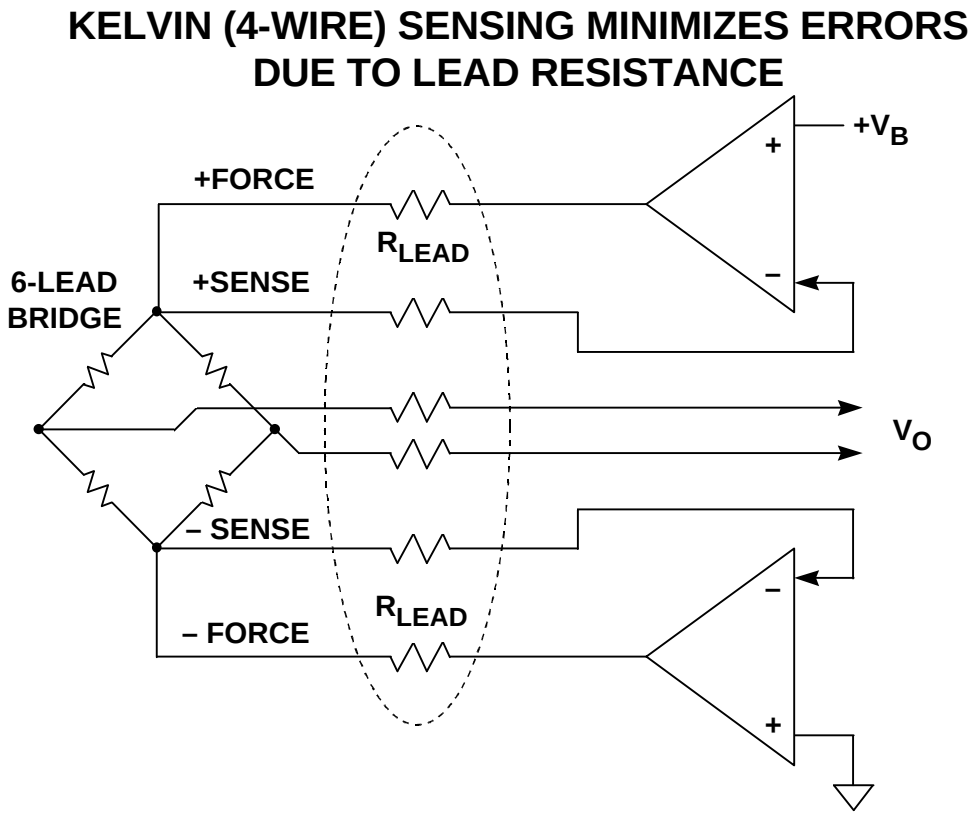

Figure 2.15

The constant current excitation method shown in Figure 2.16 is another method for minimizing the effects of wiring resistance on the measurement accuracy. However, the accuracy of the reference, the sense resistor, and the op amp all influence the overall accuracy.

A very powerful *ratiometric* technique which includes Kelvin sensing to minimize errors due to wiring resistance and also eliminates the need for an accurate excitation voltage is shown in Figure 2.17. The AD7730 measurement ADC can be driven from a single supply voltage which is also used to excite the remote bridge. Both the analog input and the reference input to the ADC are high impedance and fully differential. By using the + and – SENSE outputs from the bridge as the differential reference to the ADC, there is no loss in measurement accuracy if the actual bridge excitation voltage varies. The AD7730 is one of a family of sigma-delta ADCs with high resolution (24 bits) and internal programmable gain amplifiers (PGAs) and is ideally suited for bridge applications. These ADCs have self- and system calibration features which allow offset and gain errors due to the ADC to be minimized. For instance, the AD7730 has an offset drift of 5nV/ºC and a gain drift of 2ppm/ºC. Offset and gain errors can be reduced to a few microvolts using the system calibration feature. (A more detailed discussion of these ADCs can be found in Section 8).

CONSTANT CURRENT EXCITATION MINIMIZES WIRING RESISTANCE ERRORS

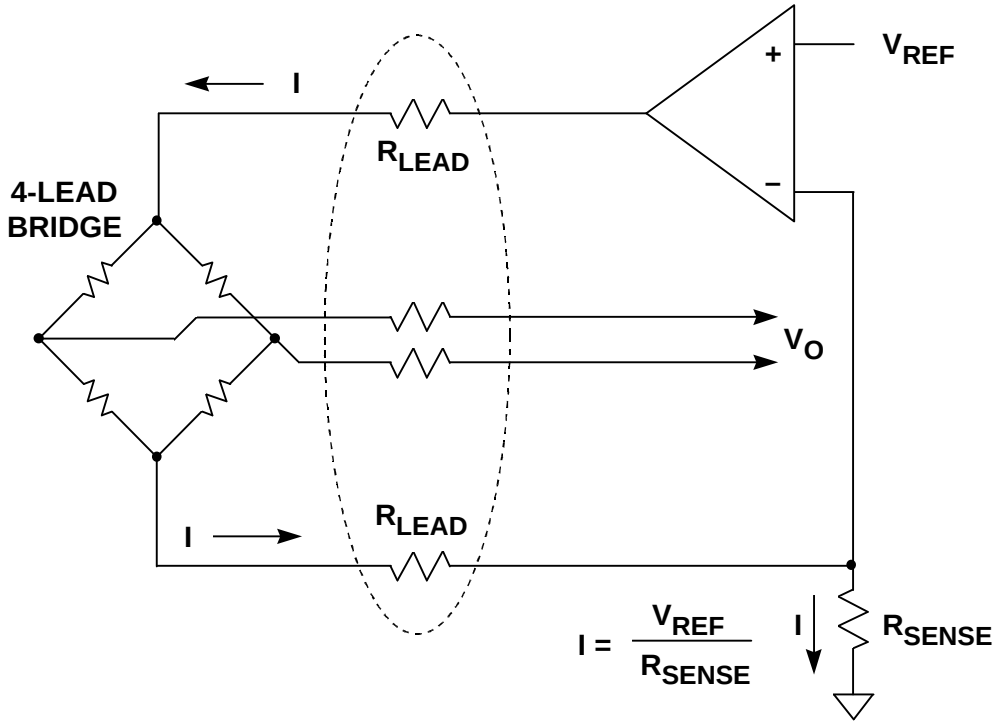

Figure 2.16

DRIVING REMOTE BRIDGE USING KELVIN (4-WIRE) SENSING AND RATIOMETRIC CONNECTION TO ADC

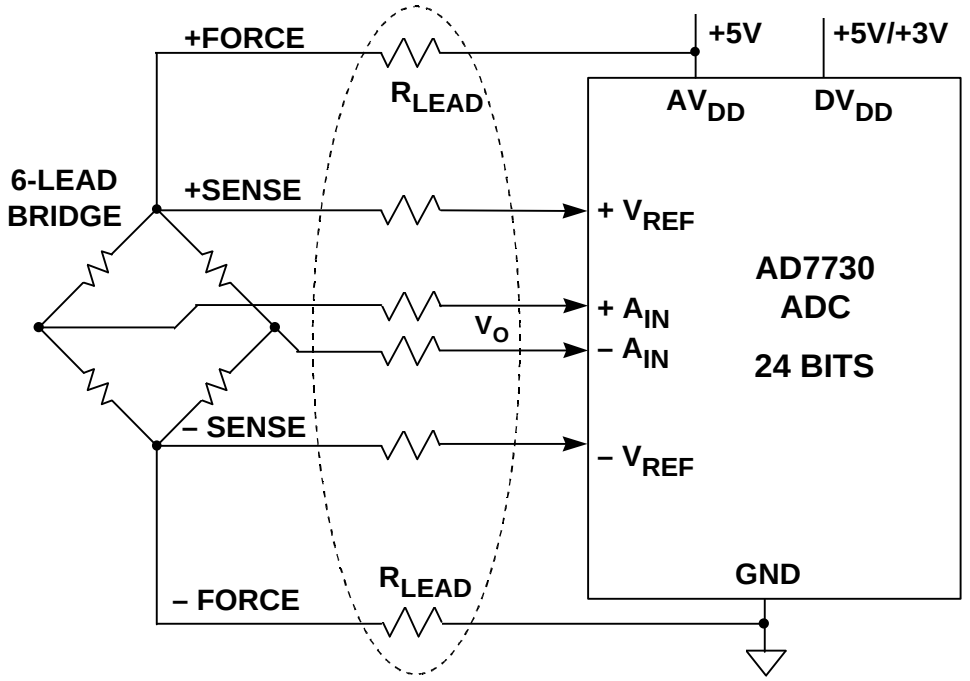

Figure 2.17

Maintaining an accuracy of 0.1% or better with a fullscale bridge output voltage of 20mV requires that the sum of all offset errors be less than 20µV. Figure 2.18 shows some typical sources of offset error that are inevitable in a system. Parasitic thermocouples whose junctions are at different temperatures can generate voltages between a few and tens of microvolts for a 1ºC temperature differential. The diagram shows a typical parasitic junction formed between the copper printed circuit board traces and the kovar pins of the IC amplifier. This thermocouple voltage is about 35µV/ºC temperature differential. The thermocouple voltage is significantly less when using a plastic package with a copper lead frame.

The amplifier offset voltage and bias current are other sources of offset error. The amplifier bias current must flow through the source impedance. Any unbalance in either the source resistances or the bias currents produce offset errors. In addition, the offset voltage and bias currents are a function of temperature. High performance low offset, low offset drift, low bias current, and low noise precision amplifiers such as the OP177 or AD707 are required. In some cases, chopper-stabilized amplifiers such as the AD8551/AD8552/AD8554 may be the only solution.

TYPICAL SOURCES OF OFFSET VOLTAGE

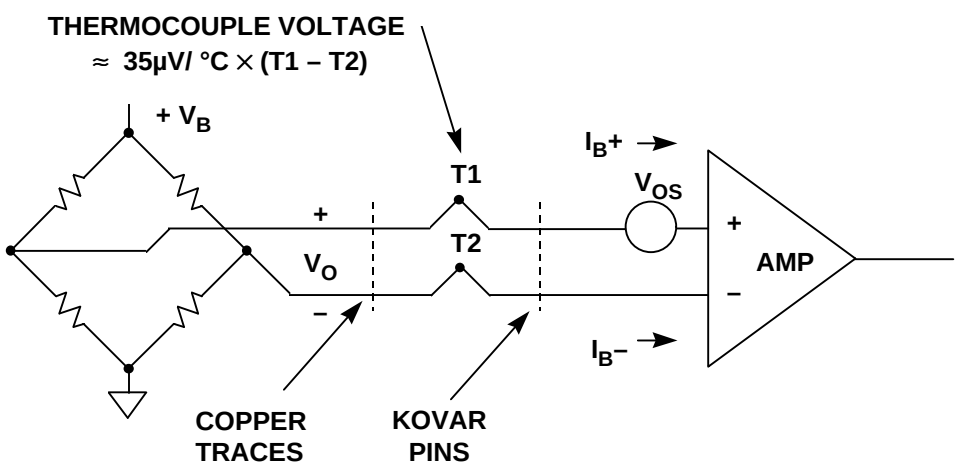

Figure 2.18

AC bridge excitation as shown in Figure 2.19 can effectively remove offset voltages in series with the bridge output. The concept is simple. The net bridge output voltage is measured under two conditions as shown. The first measurement yields a measurement V_A, where V_A is the sum of the desired bridge output voltage V_O and the net offset error voltage E_{OS}. The polarity of the bridge excitation is reversed, and a second measurement V_B is made. Subtracting V_B from V_A yields $2V_O$, and the offset error term E_{OS} cancels as shown.

Obviously, this technique requires a highly accurate measurement ADC (such as the AD7730) as well as a microcontroller to perform the subtraction. If a ratiometric reference is desired, the ADC must also accommodate the changing polarity of the reference voltage. Again, the AD7730 includes this capability.

AC EXCITATION MINIMIZES OFFSET ERRORS

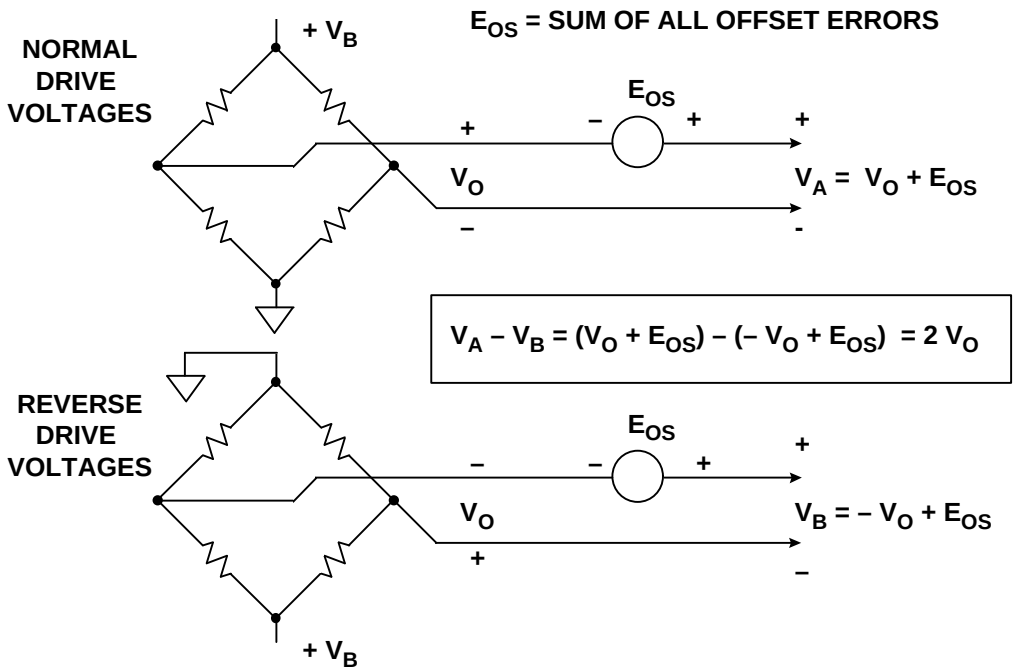

Figure 2.19

P-Channel and N-Channel MOSFETs can be configured as an AC bridge driver as shown in Figure 2.20. Dedicated bridge driver chips are also available, such as the Micrel MIC4427. Note that because of the on-resistance of the MOSFETs, Kelvin sensing must be used in these applications. It is also important that the drive signals be non-overlapping to prevent excessive MOSFET switching currents. The AD7730 ADC has on chip circuitry to generate the required non-overlapping drive signals for AC excitation.

SIMPLIFIED AC BRIDGE DRIVE CIRCUIT

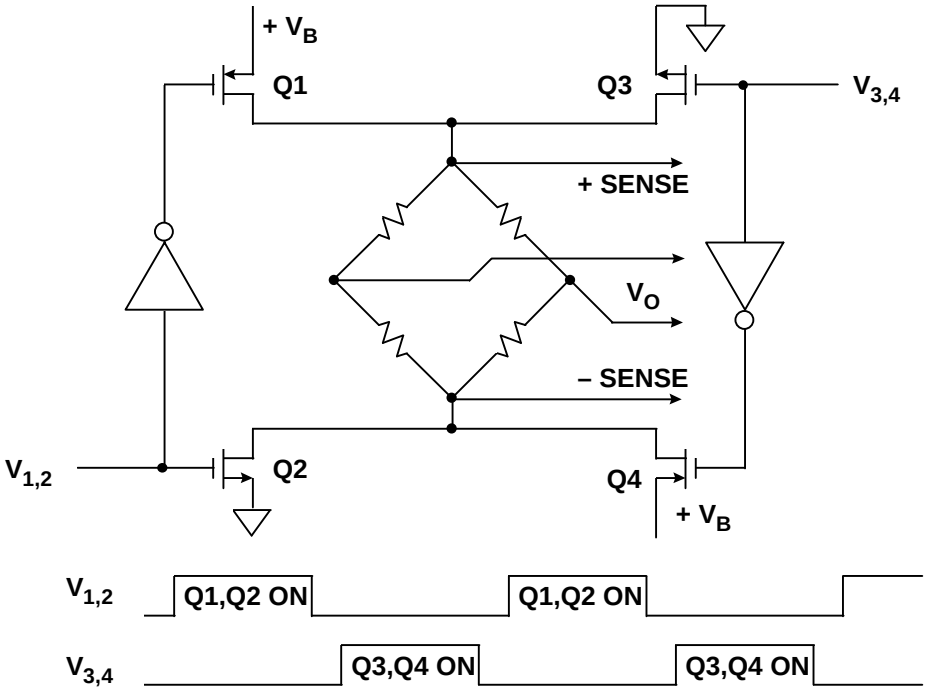

Figure 2.20

REFERENCES

1. Ramon Pallas-Areny and John G. Webster, **Sensors and Signal Conditioning**, John Wiley, New York, 1991.

2. Dan Sheingold, Editor, **Transducer Interfacing Handbook**, Analog Devices, Inc., 1980.

3. Walt Kester, Editor, **1992 Amplifier Applications Guide**, Section 2, 3, Analog Devices, Inc., 1992.

4. Walt Kester, Editor, **System Applications Guide**, Section 1, 6, Analog Devices, Inc., 1993.

5. AD7730 Data Sheet, Analog Devices, available at http://www.analog.com.