One Technology Way • P.O. Box 9106 • Norwood, MA 02062-9106, U.S.A. • Tel: 781.329.4700 • Fax: 781.461.3113 • www.analog.com

AD9743/AD9745/AD9746/AD9747 Evaluation Board Quick Start Guide

FEATURES

Fully functional evaluation board
PC software for control with Analysis | Control | Evaluation (ACE) software

EVALUATION KIT CONTENTS

EVAL-AD9743, EVAL-AD9745, EVAL-AD9746, or EVAL-AD9747 evaluation board
Mini-USB cable

ADDITIONAL HARDWARE NEEDED

5 V dc power supply: Agilent E3630A
DPG3 digital pattern generator or SDP-H1 controller board
FMC to high speed DAC evaluation board adapter, AD-DAC-FMC-ADP (only required for use with SDP-H1)
DAC clock source
AQM LO clock source
Spectrum analyzer
PC with two or more USB ports
Windows operating system, Windows 7 or newer

ADDITIONAL SOFTWARE NEEDED

Analysis | Control | Evaluation (ACE) software
DPGDownloaderLite software

GENERAL DESCRIPTION

The EVAL-AD9743, EVAL-AD9745, EVAL-AD9746, and EVAL-AD9747 evaluation boards connect to the Analog Devices, Inc., digital pattern generator board, DPG3, or the system demonstration platform (SDP) controller board, SDP-H1 through the AD-DAC-FMC-ADP adapter board to evaluate the AD9743/AD9745/AD9746/AD9747.

All instructions and descriptions in this user guide reference the AD9747 and EVAL-AD9747. These descriptions and instructions are relevant to the AD9743/AD9745/AD9746/AD9747 devices and their respective evaluation boards, unless otherwise noted.

The DPG3 or SDP-H1 allows the creation of many types of digital vectors and transmits these vectors at high speed to the AD9747 in any operating mode. The EVAL-AD9747 is configured via USB either using the legacy software from a panel within the DPGDownloaderLite software, or through the ACE software panel. Both software options are explained in more detail in this user guide.

For more details, see the AD9743/AD9745/AD9746/AD9747 data sheets, which must be used in conjunction with this user guide when using the evaluation board.

PLEASE SEE THE LAST PAGE FOR AN IMPORTANT
WARNING AND LEGAL TERMS AND CONDITIONS.

TABLE OF CONTENTS

Features ... 1
Evaluation Kit Contents ... 1
Additional Hardware Needed ... 1
Additional Software Needed ... 1
General Description ... 1
Revision History ... 2
Evaluation Board Photograph ... 3
Evaluation Board Hardware ... 4
Hardware Setup (DAC Output) ... 4
Selecting Modulator Outputs ... 6
Jumper Options ... 6
Evaluation Board Software ... 7
Software Setup ... 7
ACE Software ... 9
Evaluation Board Software Quick Start Procedures (Legacy) ... 12
Legacy SPI Software ... 12
Evaluation Board Configuration with SPI Software (Legacy) ... 13

REVISION HISTORY

3/2020—Revision 0: Initial Version

EVALUATION BOARD PHOTOGRAPH

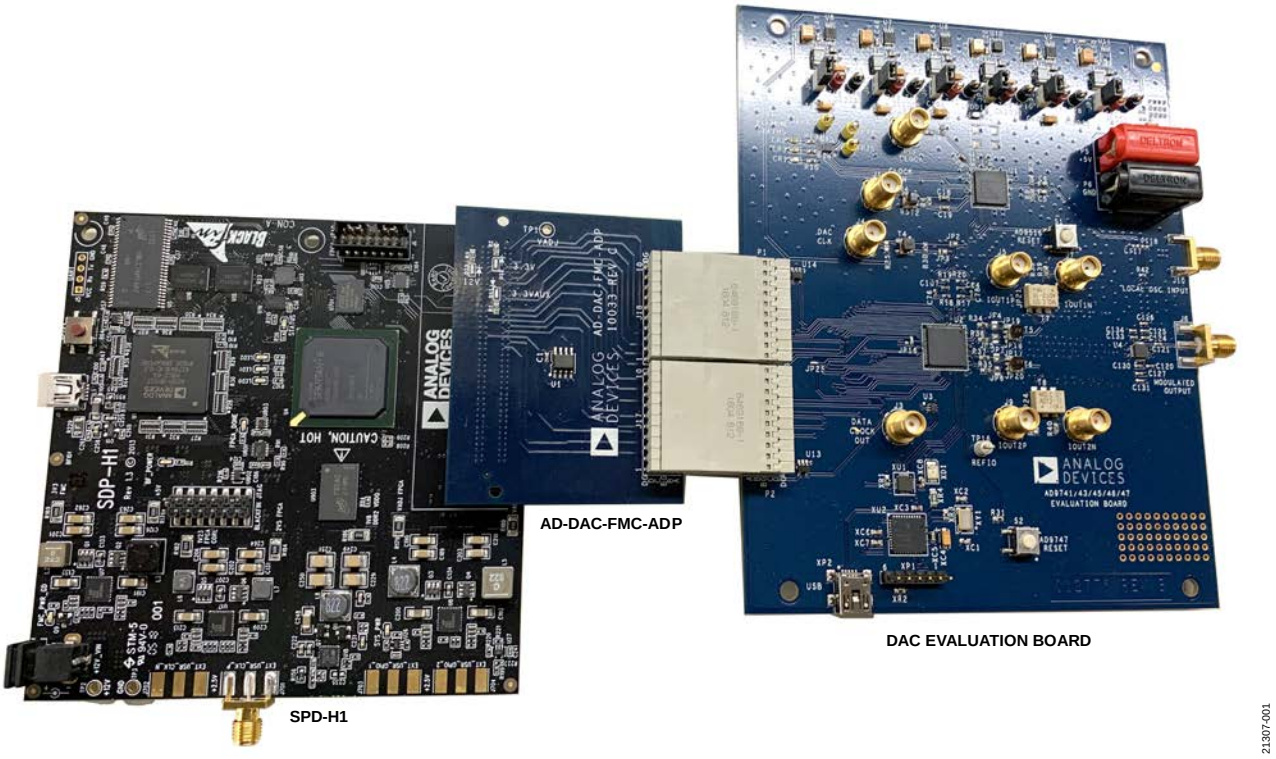

Figure 1.

EVALUATION BOARD HARDWARE

HARDWARE SETUP (DAC OUTPUT)

1. Connect a 5 V dc power supply to the P5 and P6 power supplies (red and black banana jacks, respectively) on the AD9743/AD9745/AD9746/AD9747 evaluation board.
2. A single, 5 V supply powers the evaluation board and sources up to 1 A, which is sufficient for the operating conditions of the evaluation board.
3. If using the SDP-H1, connect the P1 and P2 male connectors on the AD9743/AD9745/AD9746/AD9747 board to the AD-DAC-FMC-ADP female connectors on the SDP-H1 board.
4. The AD-DAC-FMC-ADP adapter board allows the EVAL-AD9747 evaluation board to be used on SDP-H1 with an FPGA mezzanine card (FMC) connector.
5. Connect a coaxial cable from the spectrum analyzer to the J5 (IOUT1_P) or J9 (IOUT2_P).
6. Connect a coaxial cable from the signal generator to J1 (CLK_IN).
7. Connect the provided USB cable from the PC to the USB connector on the SDP-H1.
8. Connect a 12 V dc power supply to the power supply connector outlet on the SDP-H1.
9. If using the DPG3, connect the P1 and P2 male connectors on the AD9743/AD9745/AD9746/AD9747 board to the DPG3 female connectors.
10. Install the DAC Software Suite before connecting the USB cable to the PC.
11. Connect the USB cable to the mini USB, XP2 connector on the AD9743/AD9745/AD9746/AD9747 evaluation board as shown in Figure 2.

Table 1 describes the required components and their connections to the EVAL-AD9747.

Table 1. Hardware Connections

Component	Connection[1]
Power Supply	P5 (+5V), P6 (GND)
Signal Source	J1 (CLOCK IN), set source to 100 MHz, 2 dBm output
USB Cable	XP2
Spectrum Analyzer	J5 (IOUT1_P) or J9 (IOUT2_P)
DPG3	P1 and P2
SDP-H1	J4/FMC connector

[1] Values shown in parentheses are labels on the evaluation board.

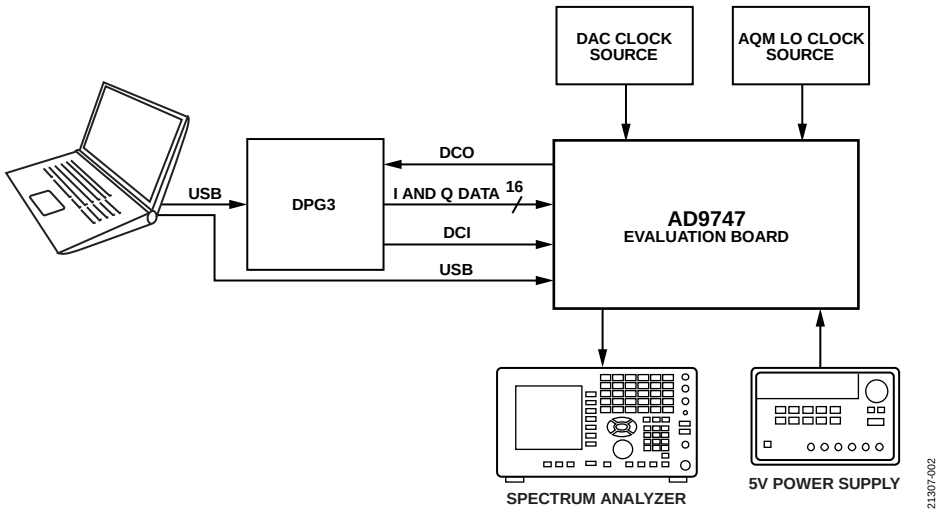

Figure 2. Bench Setup with the DPG3 Board

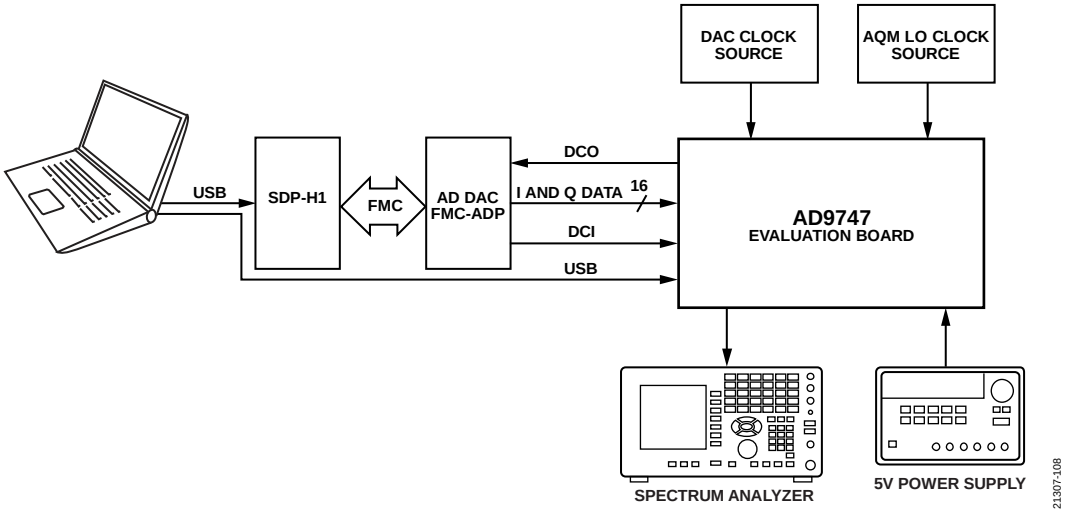

Figure 3. Bench Setup with SDP-H1, AD-DAC-FMC-ADP, and the EVAL-AD9747

Figure 4. DPG3 and EVAL-AD9747 Evaluation Board

SELECTING MODULATOR OUTPUTS

By default, jumpers JP4, JP5, JP6, and JP7 configure the DAC outputs to be observed at the J5 and J9 SMA outputs, as shown in Figure 5. To connect the DAC outputs to the low-pass filter and to any of the devices in the ADL5370 to ADL5375 family (included on the evaluation board) analog quadrature modulator, reposition the solder jumpers, as shown in Figure 6. The modulator output can be observed through the J6 SMA connector (MODULATED OUTPUT on the evaluation board). The modulator LO input can be sourced through the J10 SMA connector (LOCAL OSC INPUT on the evaluation board). Set the clock level into the modulator to ~3 dBm.

JUMPER OPTIONS

The evaluation board has six pin jumpers that correspond to the six supplies on the board. These pin jumpers serve as switches that determine if the board low dropout (LDO) regulators or external supplies are used for each individual supply. The jumpers are shunted by default and on-board LDOs are used. When an external supply is necessary, pull off the shunt from the corresponding supply and connect the external supply to the SMA test points close to the jumper.

Table 2. Pin Jumper Configuration Options

Supply Rail	Pin Jumper for LDO	Test Points for External Supply[1]
CVDD18	JP10	TP1 (1.8 V), TP2 (GND)
DVDD18	JP11	TP3 (1.8 V), TP4 (GND)
DVDD33	JP12	TP5 (1.8 V), TP6(GND)
AVDD33	JP13	TP7(1.8 V), TP8 (GND)
CVDD33	JP14	TP9 (1.8 V), TP10 (GND)
AVDD5	JP15	TP11 (1.8 V), TP12 (GND)

[1] The values in parentheses indicate voltage supplies.

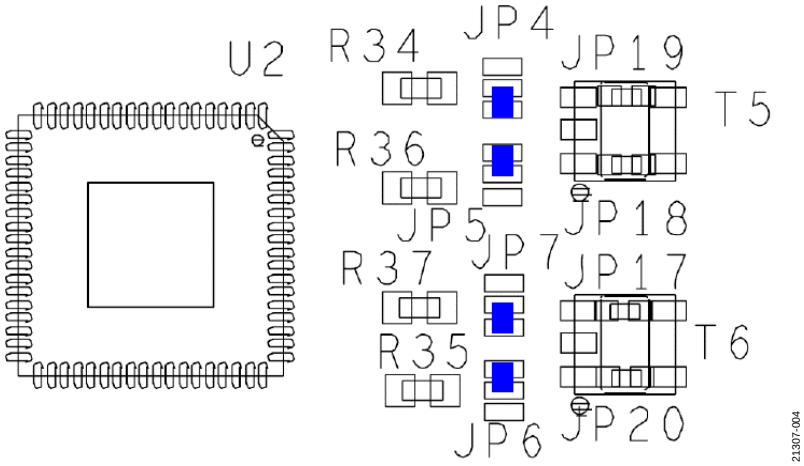

Figure 5. DAC Output Configuration

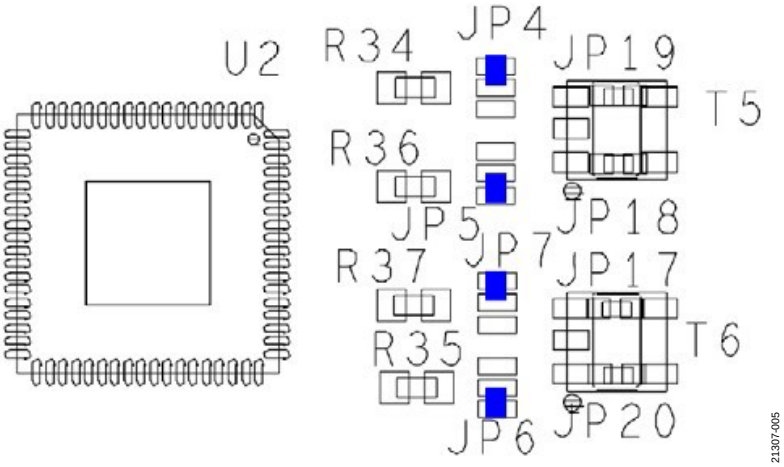

Figure 6. Modulator Output Configuration

EVALUATION BOARD SOFTWARE

SOFTWARE SETUP

Before using the evaluation board, the user must install the evaluation software on the PC that is connected to the evaluation board. There are two different software options: ACE and DPGDownloaderLite, which are not compatible with one another. The user must select a software option and only follow the installation and setup instructions for that specific option. The selected setup applies to all legacy high-speed digital-to-analog converter (DAC) devices. If other high speed DAC evaluation boards are used on the same PC, the selected software installation runs for all devices.

The legacy software is a LabVIEW serial peripheral interface (SPI) graphical user interface (GUI) controller along with DPGDownloaderLite, which is installed through DAC Software Suite. Installation instructions for this software is explained in the section later in this guide.

ACE and DPGDownloaderLite Installation

This configuration is the recommended software setup and does not use National Instruments Virtual Instrument Software Architecture (VISA) drivers, which cause contention with other vendor VISA drivers if the PC contains this software.

12. Download the ACE installer from the ACE product page.
13. Double-click the ACE installer **.exe** file. The **Welcome to ACE Setup** window appears.
14. Click **Next**. The **License Agreement** window appears.
15. Click **I Agree** to proceed.
16. Select a destination folder for installation and click **Next**. The **Choose Components** pane in the **ACE Setup** window appears, as shown in Figure 7.
17. Expand the **High Speed DAC Components** list and select the **DPG Lite** and **HSDAC eval boards support through SDP drivers** checkboxes, as shown in Figure 7.

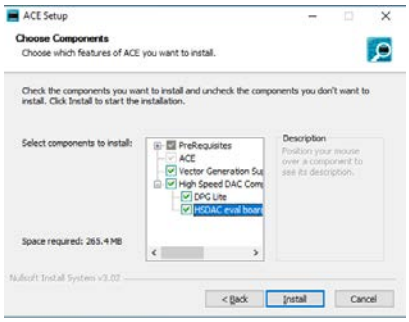

Figure 7. ACE Installation Wizard

18. Click **Install**. The installation progress window appears, as shown in Figure 8.

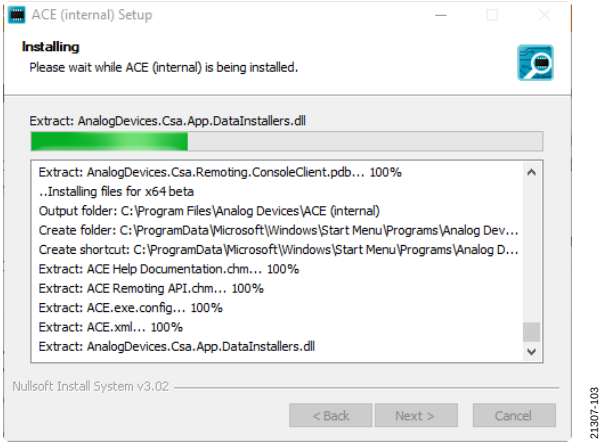

Figure 8. Installation Progress Window

19. Click **Next** to proceed. A window appears that displays the completion status of the installation. Click **Finish** to complete the installation for the ACE application and DPGDownloaderLite is complete.

Plug-In Installation from ACE

After the ACE software is installed, the user must install the plug-in for the specific evaluation board. Installing plug-ins can be performed using the **Plug-in Marketplace** feature in the ACE software as described in this section. Plug-ins can be downloaded from the ACE software page and searching for the relevant device number within the ACE software.

To install a plug-in, take the following steps:

1. From the **Start** menu, click **All Programs > Analog Devices > ACE** to open the main ACE software window.
2. In the left-hand pane, click **Plug-in Marketplace**. The **Manage Plug-ins** window appears, as shown in Figure 9.

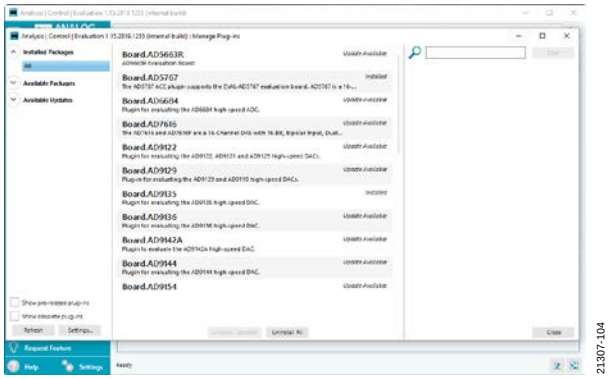

Figure 9. ACE Plug-ins Window

3. Click the **Available Packages** dropdown menu on the left side of the software screen.

4. Enter the device model number in the search bar on the right side of the screen to search for the device that is intended for evaluation and find the appropriate board plug-in.
5. Select the required plug-in and click **Install Selected**, as shown in Figure 10.
6. Click **Close**.

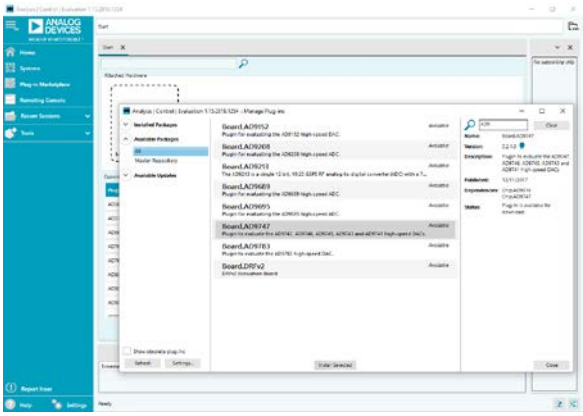

Figure 10. ACE Software, Manage Plug-ins Window

Plug-In Installation from the Web

1. Ensure that the ACE software is installed.
2. From the ACE software page on the Analog Devices, Inc., website, navigate to the **ACE Evaluation Board Plug-ins** pane and search for the device to evaluate.
3. Click the appropriate board plug-in, as shown in Figure 11. The board plug-in automatically is downloaded to the PC. When the download is complete, locate the downloaded file. For example, **Board.AD9783.1.2019.43200.acezip**. Note that if the browser used for the plug-in download is Internet Explorer, the file extension of the plug-in file is **.zip**. If this occurs, right-click the file and rename the file extension to **.acezip**.

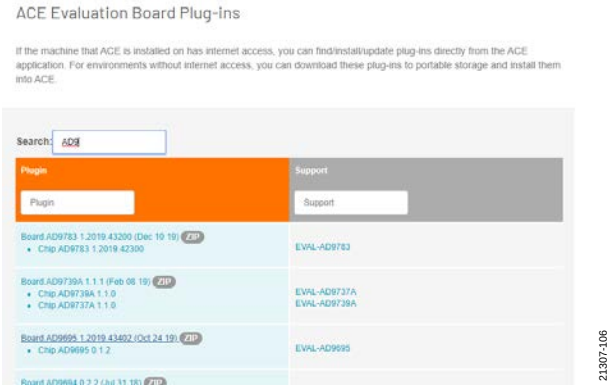

Figure 11. ACE Plug-In Web Installation

4. Double-click the **.acezip** file to automatically install the plug-in.
5. When this plug-in installation is complete, open the ACE software.

ACE SOFTWARE

Single-Tone Demonstration with ACE Software

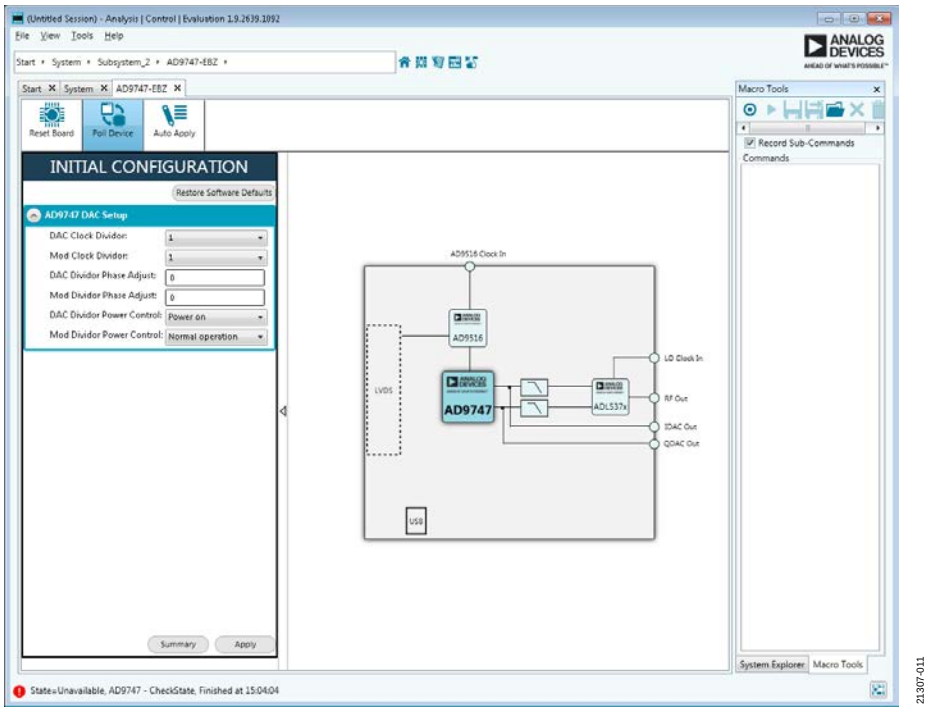

Figure 12. Initial ACE Software Screen

Verify the basic hardware setup settings as described in the Evaluation Board Hardware section before making any modifications to the evaluation board.

To configure the AD9747 to output a 17 MHz sine wave with the DPGDownloaderLite and ACE software, take the following steps:

1. Configure the hardware as described in the Evaluation Board Hardware section. Set the frequency of the DAC clock signal generator to 100 MHz and set the output level to 2 dBm. Connect the spectrum analyzer to either J5 or J9. Ensure that the DPGDownloaderLite software is closed and open the ACE software. The ACE software appears as shown in Figure 12.
2. From the initial ACE screen, click the **AD9747-EBZ** icon and populate the fields in the **Initial Configuration** pane, as shown in Figure 13. Click **Apply**.
3. If the USB cable to the EVAL-AD9747 evaluation board is ever unplugged, the user can navigate to the **System** tab, ensure that the USB icon in the **Subsystem_1** image is illuminated green, as shown in Figure 14. If the USB is not illuminated green, click the icon, select the AD9747, and click **Acquire**.
4. After clicking **Apply**, double-click the AD9747 chip plugin from the board view, which navigates to the chip view (see Figure 14) to configure additional controls as necessary on the DAC.
5. When the ACE software is configured, close the ACE application and launch the DPGDownloaderLite.
6. Add a single-tone vector with **Sample Rate** of 100 MHz and **Desired Frequency** of 17 MHz.
7. Ensure that the **Unsigned Data** checkbox is unselected and select the **Generate Complex Data (I & Q)** checkbox. Set the values for the **I Data Vector** and **Q Data Vector** fields, and then click the download and play control. The output spectrum must match what is shown in Figure 19, similar to the SPI setup using the Legacy SPI software.

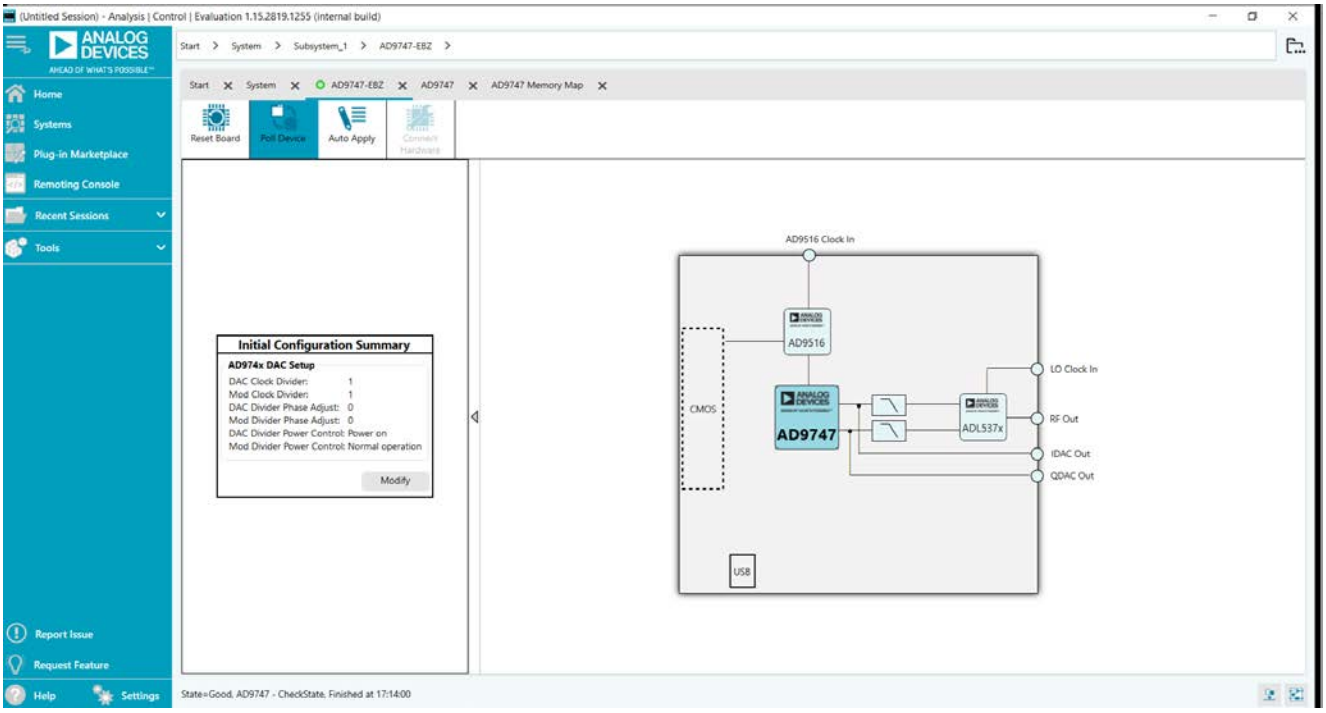

*Figure 13. **AD9747-EBZ** Tab, **Initial Configuration** Pane Fields Populated*

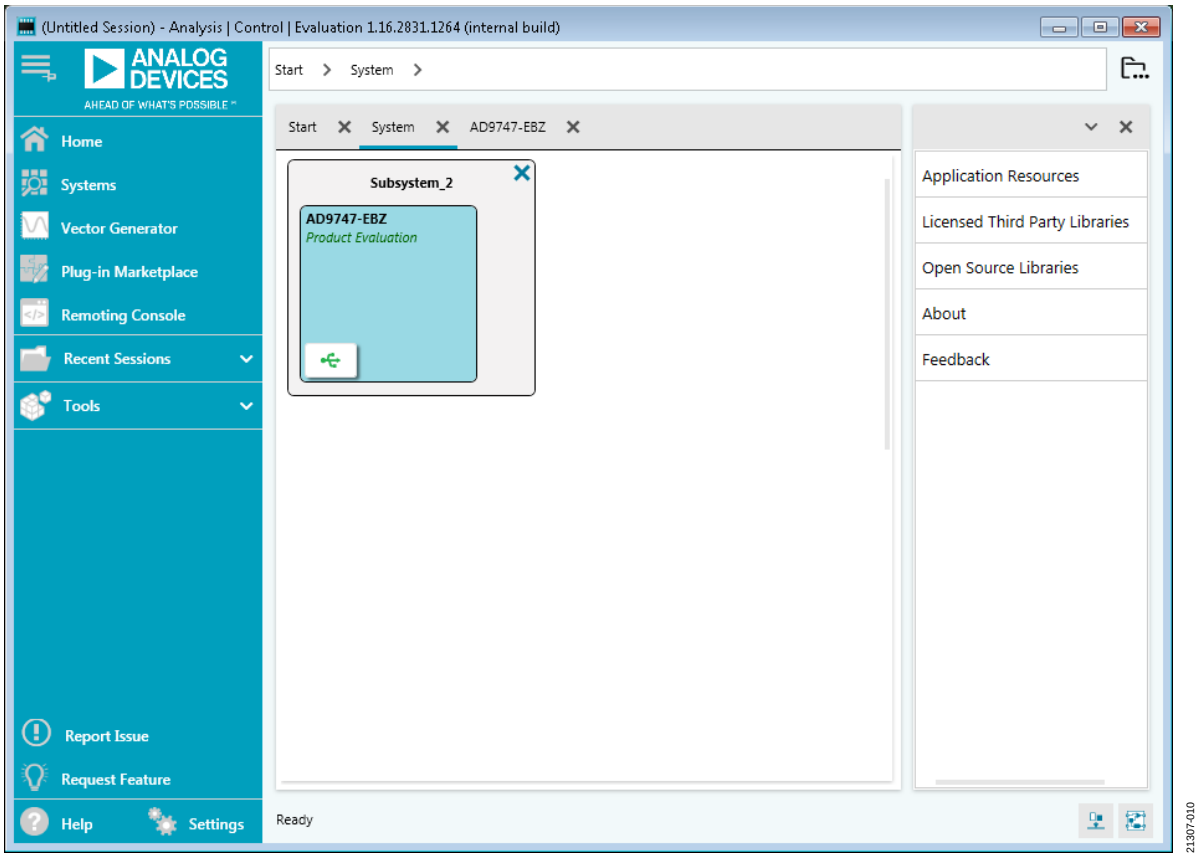

*Figure 14. **System** Tab, USB Connection Acquired*

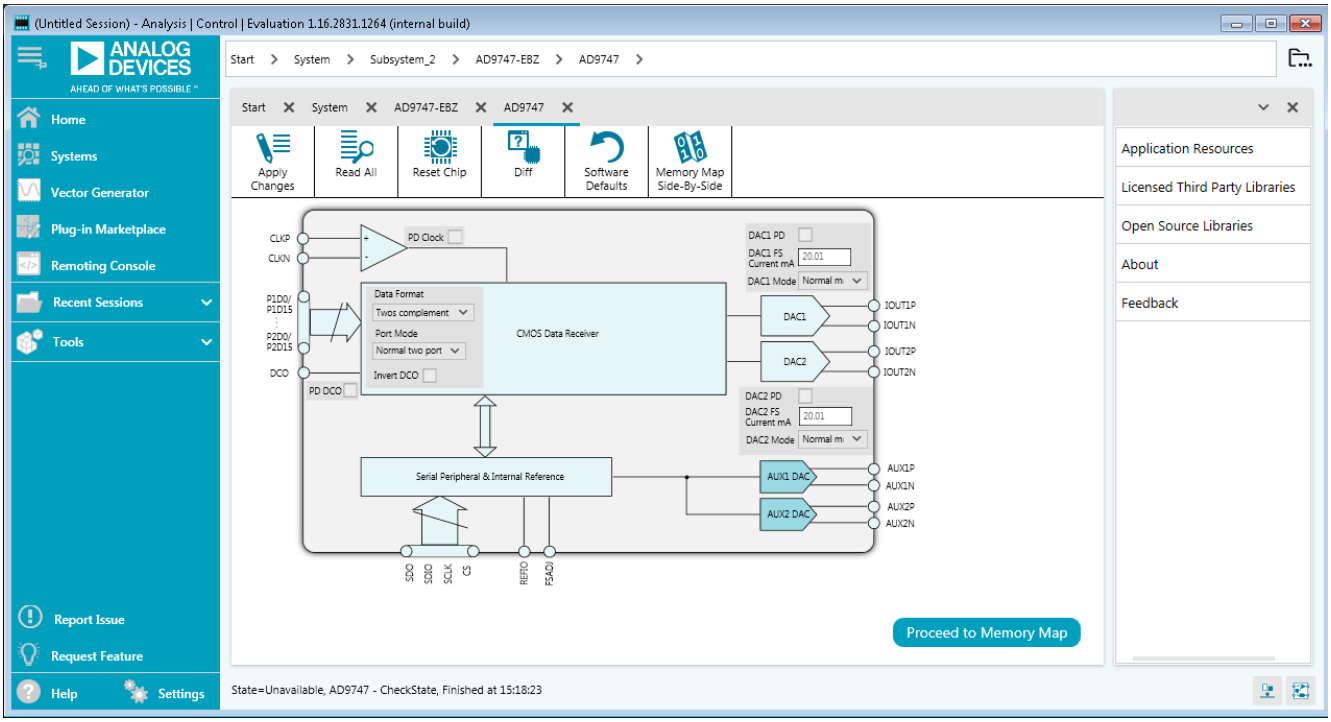

Figure 15. ACE AD9747 Chip View for Additional Controls

EVALUATION BOARD SOFTWARE QUICK START PROCEDURES (LEGACY)

LEGACY SPI SOFTWARE

The legacy software to control the components of the EVAL-AD9747 is embedded in the DPGDownloader panel.

Due to a USB contention issue, the DPGDownloader and ACE software cannot be open at the same time as the board cannot not be recognized by the ACE software in this situation. To use the ACE software, launch the ACE program to configure any device in the AD9516-0 to AD9516-5 family (included on the evaluation board) and AD9747 on the evaluation board, and then close the ACE application before opening the DPGDownloader to configure the vector to download.

Example Setup Using Legacy SPI and DPGDownloader Software

To use the Legacy SPI and DPGDownloader software, take the following steps:

8. Power up the DPG3 board and connect the USB cable to the PC.
9. Run the DPGDownloader software via the shortcut that is automatically installed to the **Start** menu after the DAC Software Suite is installed.

The basic elements of the DPGDownloader window are labeled in Figure 16 as the **Hardware Configuration Panel**, **EVB Config**, **Vector Generation Pull-Down Menu**, **Vector Palette**, and the **Vector Selection Panel**, as well as the download and play controls.

When the PC recognizes the EVAL-AD9747, the **Evaluation Board** dropdown menu in the **DPG2 UNIT 1** pane populates with **AD9747 RevB**.

To generate a sine wave, click the **Add Generated Waveform** menu and select **Single Tone**. Fill in the form as shown in Figure 16 (**Sample Rate** = 100 MHz, **Desired Frequency** = 17.0 MHz, and so on). In the **Data Playback** pane, select the **I Data Vector** and **Q Data Vector**.

For details about the DPGDownloader software, click the **Help** dropdown menu and locate the software documentation. To update the DPGDownloader software, click the **Help** dropdown menu and select **Check for Updates**. If a new version of the software is available, it automatically downloads and installs to the PC.

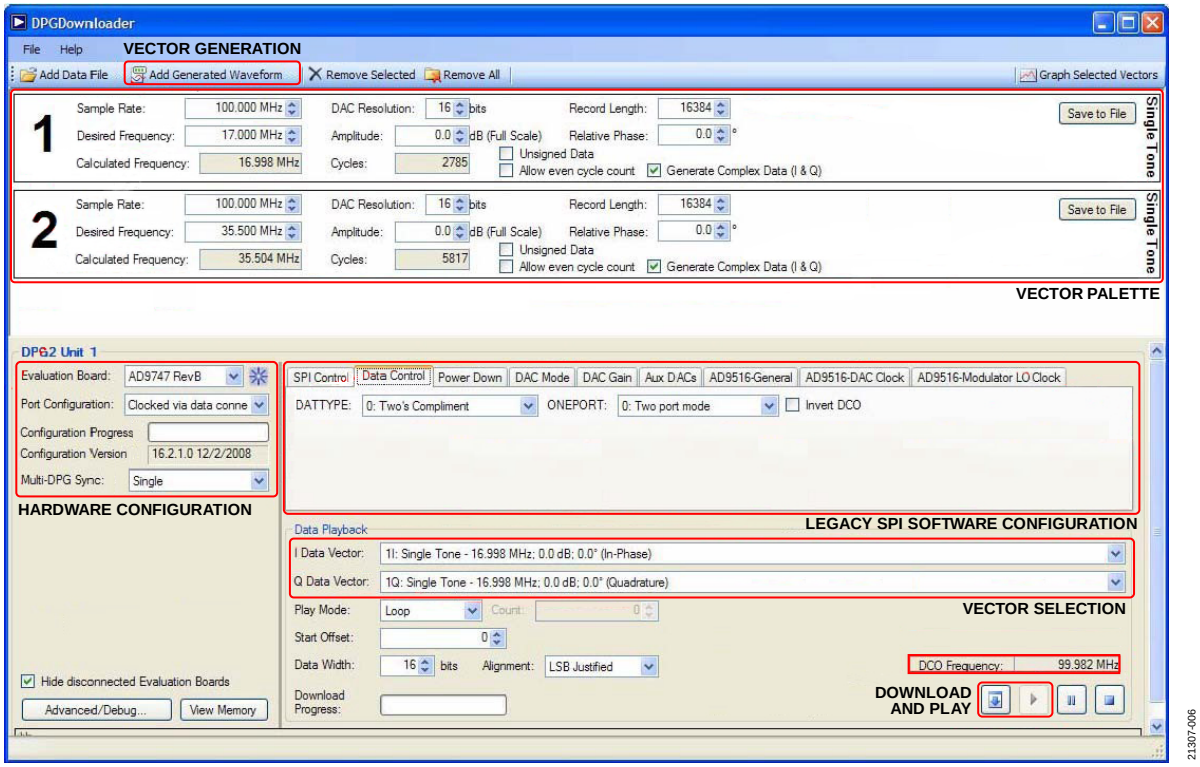

Figure 16. DPGDownloader Window

EVALUATION BOARD CONFIGURATION WITH SPI SOFTWARE (LEGACY)

To configure the EVAL-AD9747 with the Legacy SPI software, take the following steps:

1. To configure the AD9516-0 to AD9516-5 to use the CLK input to drive the clock path click the **AD9516-General** tab. In the **Register Access** pane, set the **Address** field to **1E1** and set the field to the left of the **Write** control to **01**.
2. Select the **AD9516-DAC Clock** tab, select the **Bypass** checkboxes for **Divider 1** and **Divider 2** to bypass the clock dividers on the AD9516-0 to AD9516-5 (see Figure 16).
3. In the **Data Control** tab, the **DCO Frequency:** field now reads ~100 MHz. Click the download control ( ) to transfer the data from the PC to the DPG memory.
4. When the vector download is complete, click the play control ( ) to initiate a data transmission from the DPG3 to the EVAL-AD9747.
5. The output from J5 and J9 is a clean, 17 MHz tone, as shown in Figure 19.

Figure 17. Legacy SPI Software Panel, Embedded in DPGDownloader

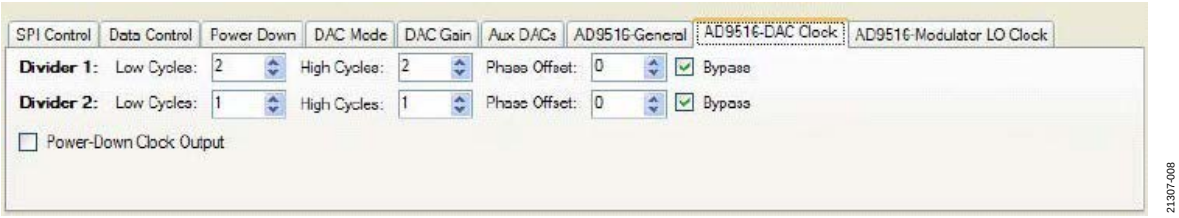

*Figure 18. **AD9516-DAC Clock** Tab, SPI Control Divider Setup*

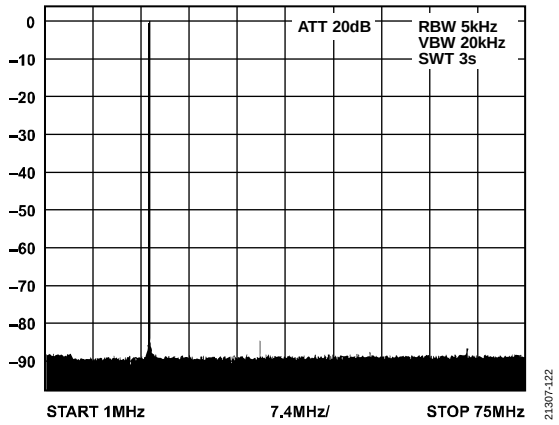

Figure 19. Single-Tone 17 MHz Output from AD9743/AD9745/AD9746/AD9747 Evaluation Board DAC Outputs

Using the Evaluation Boards

The evaluation boards for the AD9743/AD9745/AD9746/AD9747 are identical, except for the installed device under test (DUT). The operation of these evaluation boards is identical, except for the values in the **DAC Resolution** and **Data Width** fields, which must be configured to match the DUT (see Figure 20).

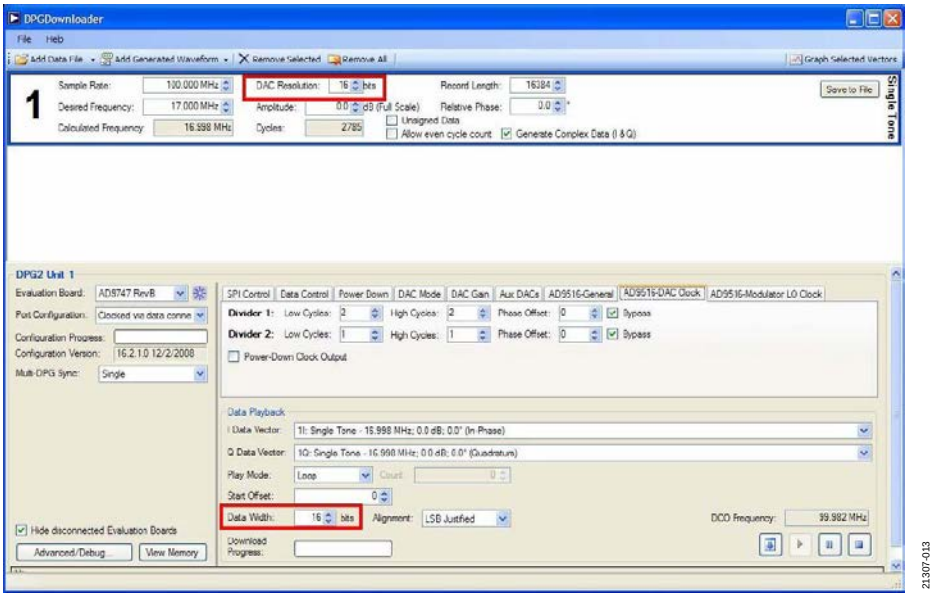

21307-013

Figure 20. Resolution Fields to Adjust Based on DUT

ACE Macro Tools

The ACE software contains a macro tool that can record register reads and writes, which are executed in the memory map view or with the initialization wizard. To use the macro tool, select the **Record Sub-Commands** checkbox and click the record control. Changes in the memory map are bolded until they are applied to the device and are recorded as user interface (UI) commands by the macro tool when the changes are applied. Modified register write commands for the controls are also recorded in the macro tool, as shown in Figure 21. Click **Apply Changes** to execute the commands and make changes in the memory map. To stop recording, click the stop recording control in the **Macro Tools** window and save the macro so that it can be loaded for future use.

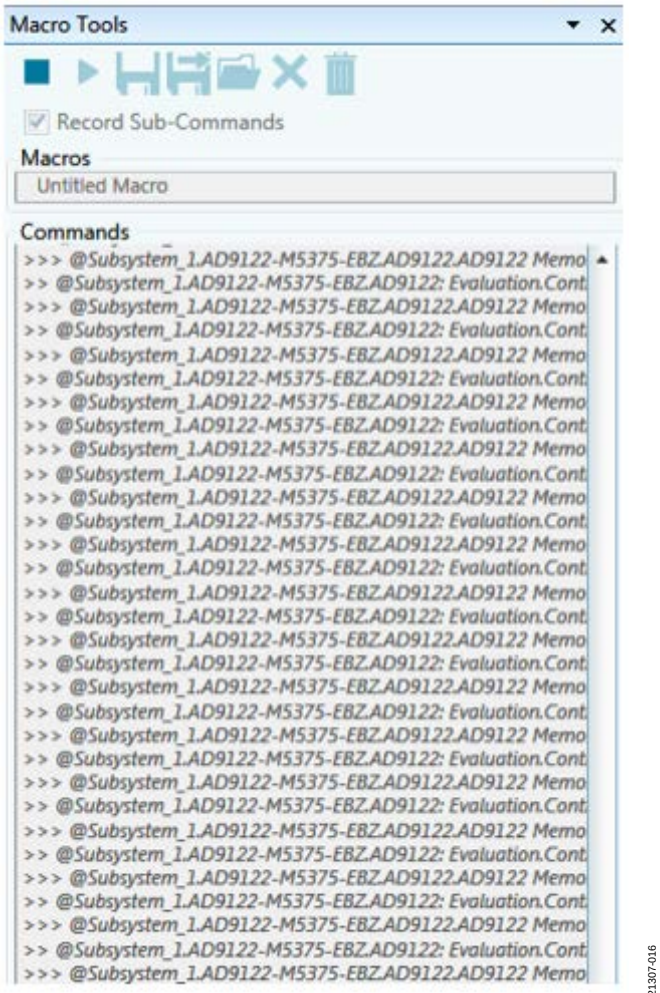

Figure 21. Macro Tool in the ACE Software

The raw macro file is saved using ACE syntax, which is not easily readable. The ACE software download includes an **ACE Macro to Hex Converter** tool, as shown in Figure 22, launched by clicking to **Start > All Programs > Analog Devices > Macro to Hex Converter**.

The user can choose to include or exclude register write, reads, and/or comments in the conversion. The file pathways for the source and save paths are the same, except one path is an **.acemacro** file and the other path is a **.txt** file. The **Convert** control converts and opens the simplified converted text file. The conversion tool can also convert the macro back to an **.acemacro** file if desired.

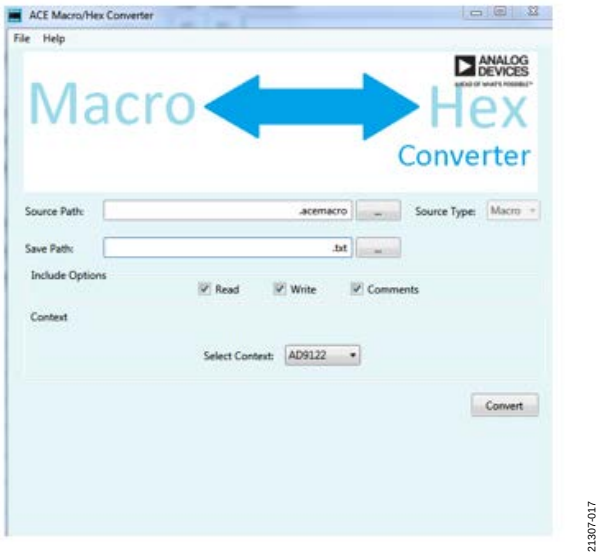

Figure 22. Conversion Setup for Macro Hex

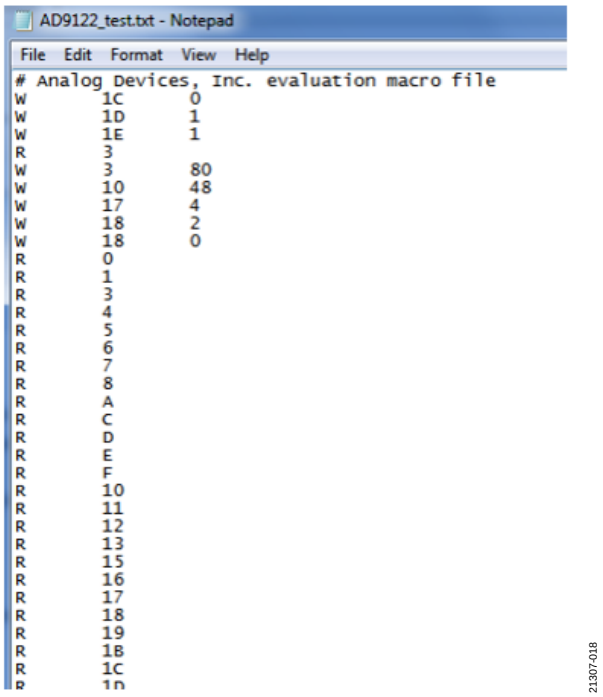

Figure 23. Example Converted Text File

NOTES

ESD Caution

ESD (electrostatic discharge) sensitive device. Charged devices and circuit boards can discharge without detection. Although this product features patented or proprietary protection circuitry, damage may occur on devices subjected to high energy ESD. Therefore, proper ESD precautions should be taken to avoid performance degradation or loss of functionality.

Legal Terms and Conditions

By using the evaluation board discussed herein (together with any tools, components documentation or support materials, the "Evaluation Board"), you are agreeing to be bound by the terms and conditions set forth below ("Agreement") unless you have purchased the Evaluation Board, in which case the Analog Devices Standard Terms and Conditions of Sale shall govern. Do not use the Evaluation Board until you have read and agreed to the Agreement. Your use of the Evaluation Board shall signify your acceptance of the Agreement. This Agreement is made by and between you ("Customer") and Analog Devices, Inc. ("ADI"), with its principal place of business at One Technology Way, Norwood, MA 02062, USA. Subject to the terms and conditions of the Agreement, ADI hereby grants to Customer a free, limited, personal, temporary, non-exclusive, non-sublicensable, non-transferable license to use the Evaluation Board FOR EVALUATION PURPOSES ONLY. Customer understands and agrees that the Evaluation Board is provided for the sole and exclusive purpose referenced above, and agrees not to use the Evaluation Board for any other purpose. Furthermore, the license granted is expressly made subject to the following additional limitations: Customer shall not (i) rent, lease, display, sell, transfer, assign, sublicense, or distribute the Evaluation Board; and (ii) permit any Third Party to access the Evaluation Board. As used herein, the term "Third Party" includes any entity other than ADI, Customer, their employees, affiliates and in-house consultants. The Evaluation Board is NOT sold to Customer; all rights not expressly granted herein, including ownership of the Evaluation Board, are reserved by ADI. CONFIDENTIALITY. This Agreement and the Evaluation Board shall all be considered the confidential and proprietary information of ADI. Customer may not disclose or transfer any portion of the Evaluation Board to any other party for any reason. Upon discontinuation of use of the Evaluation Board or termination of this Agreement, Customer agrees to promptly return the Evaluation Board to ADI. ADDITIONAL RESTRICTIONS. Customer may not disassemble, decompile or reverse engineer chips on the Evaluation Board. Customer shall inform ADI of any occurred damages or any modifications or alterations it makes to the Evaluation Board, including but not limited to soldering or any other activity that affects the material content of the Evaluation Board. Modifications to the Evaluation Board must comply with applicable law, including but not limited to the RoHS Directive. TERMINATION. ADI may terminate this Agreement at any time upon giving written notice to Customer. Customer agrees to return to ADI the Evaluation Board at that time. LIMITATION OF LIABILITY. THE EVALUATION BOARD PROVIDED HEREUNDER IS PROVIDED "AS IS" AND ADI MAKES NO WARRANTIES OR REPRESENTATIONS OF ANY KIND WITH RESPECT TO IT. ADI SPECIFICALLY DISCLAIMS ANY REPRESENTATIONS, ENDORSEMENTS, GUARANTEES, OR WARRANTIES, EXPRESS OR IMPLIED, RELATED TO THE EVALUATION BOARD INCLUDING, BUT NOT LIMITED TO, THE IMPLIED WARRANTY OF MERCHANTABILITY, TITLE, FITNESS FOR A PARTICULAR PURPOSE OR NONINFRINGEMENT OF INTELLECTUAL PROPERTY RIGHTS. IN NO EVENT WILL ADI AND ITS LICENSORS BE LIABLE FOR ANY INCIDENTAL, SPECIAL, INDIRECT, OR CONSEQUENTIAL DAMAGES RESULTING FROM CUSTOMER'S POSSESSION OR USE OF THE EVALUATION BOARD, INCLUDING BUT NOT LIMITED TO LOST PROFITS, DELAY COSTS, LABOR COSTS OR LOSS OF GOODWILL. ADI'S TOTAL LIABILITY FROM ANY AND ALL CAUSES SHALL BE LIMITED TO THE AMOUNT OF ONE HUNDRED US DOLLARS ($100.00). EXPORT. Customer agrees that it will not directly or indirectly export the Evaluation Board to another country, and that it will comply with all applicable United States federal laws and regulations relating to exports. GOVERNING LAW. This Agreement shall be governed by and construed in accordance with the substantive laws of the Commonwealth of Massachusetts (excluding conflict of law rules). Any legal action regarding this Agreement will be heard in the state or federal courts having jurisdiction in Suffolk County, Massachusetts, and Customer hereby submits to the personal jurisdiction and venue of such courts. The United Nations Convention on Contracts for the International Sale of Goods shall not apply to this Agreement and is expressly disclaimed.

©2020 Analog Devices, Inc. All rights reserved. Trademarks and registered trademarks are the property of their respective owners.

UG21307-3/20(0)

www.analog.com