Space Qualified Products

Competence
MIL-PRF-38535 Certification to Class V
RHA Assurance per MIL-STD-883 TM1019
ELDRS/SEE Reports Available

Heritage
Over 25 Years of Space Products
More Than 800 Product Configurations
Many Customer Supplier Quality Awards

Innovation
Advanced Functions
New Radiation Tolerant Product Line
More Radiation Hardened Products

2003, 2005
Rockwell Collins Top
Preferred Supplier Award

2005
Stack International
Certified

2005, 2006, 2007, 2008
Northrup Grumman Space
Technologies Supplier Award
Gold Level

2009
The Boeing Company
Performance Excellence Award
Gold Level

2009
Rockwell Collins Supplier
of the Year Award for
Standard Semiconductor

2010
The Boeing Company
Performance Excellence Award
Silver Level

2010
Stack International
Semiconductor Supplier Award
Bronze Level

2011
The Boeing Company
Performance Excellence Award
Silver Level

2012
Stack International
StackTrak Supplier
Recertification

2013
The Boeing Company
Supplier of the Year Award

2014
The Boeing Company
Supplier of the Year Award

LINEAR TECHNOLOGY | NOW PART OF ANALOG DEVICES

LT, LT, LTC, LTM, Over-The-Top, Linear Technology and the Linear logo are registered trademarks and UltraFast and C-Load are trademarks of Analog Devices, Inc. All other trademarks are the property of their respective owners.

Rethinking Radiation Hardened Low Dropout Regulators

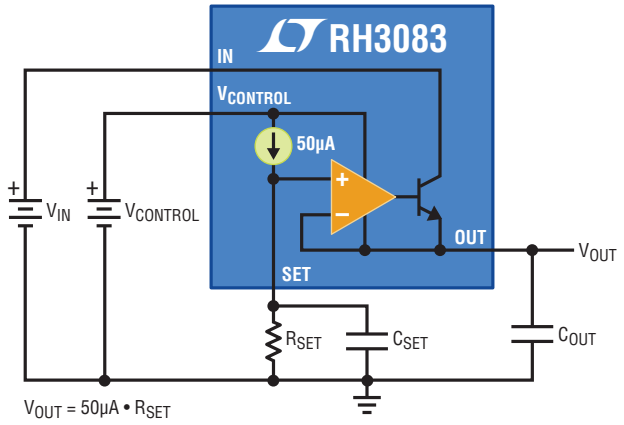

The RH3083 is a 2.8A low dropout linear regulator with a unique architecture, featuring a precision current source and voltage follower which allows the output to be programmed to any voltage between 0V and 18V. Multiple regulators can be easily paralleled to increase total output current and spread heat over a system PC board with no need for heat sinking.

Features

- **Processed in Compliance with Linear's Certified MIL-PRF-38535 Class V Flow**
- **Wide Input Range: 1.2V to 23V**
- **Output Current: 2.8A**
- **Low Dropout Voltage: 310mV**
- **Output Adjustable to 0V**
- **50µA Set Pin, ±2% Accurate to 200kRad TID**
- Stable with 10µF Ceramic Output Capacitor
- Current Limit and Thermal Protection
- Easy to Parallel for Higher Current

SET Pin Current

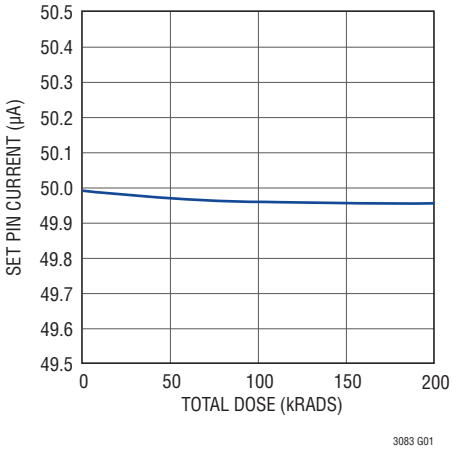

Radiation Performance

- Total Ionizing Dose (TID) Tolerance, per TM1019.8, MIL-STD-883 Up to:
  - 200kRad (Si), per Condition A at 50Rads (Si)/sec
  - 100kRad (Si), per Condition D at 10mRads (Si)/sec
  - ELDRS Pass 100kRad (Si)
- Displacement Damage Defect (DDD) Tolerance
  - Up to 1E12 Neutrons/cm^2
- Single Event Latchup (SEL) Threshold Linear Energy Transfer (LET)
  - ≥ 110MeV.cm^2/mg at T_{CASE} = 100°C

Availability

RH3083MK class V compliant dice are available from Linear Technology for use in custom hybrids.
Packaged products are developed by our trusted partners, Cobham (Aeroflex) and Anaren (MSK).

- Cobham (Aeroflex) part numbers: VRG8669, VRG8697, VRG8698
- Anaren (MSK) part numbers: MSK5983RH, MSK5984RH, MSK5985RH, MSK5986RH

60V Radiation Hardened Controller Optimizes Size and Efficiency

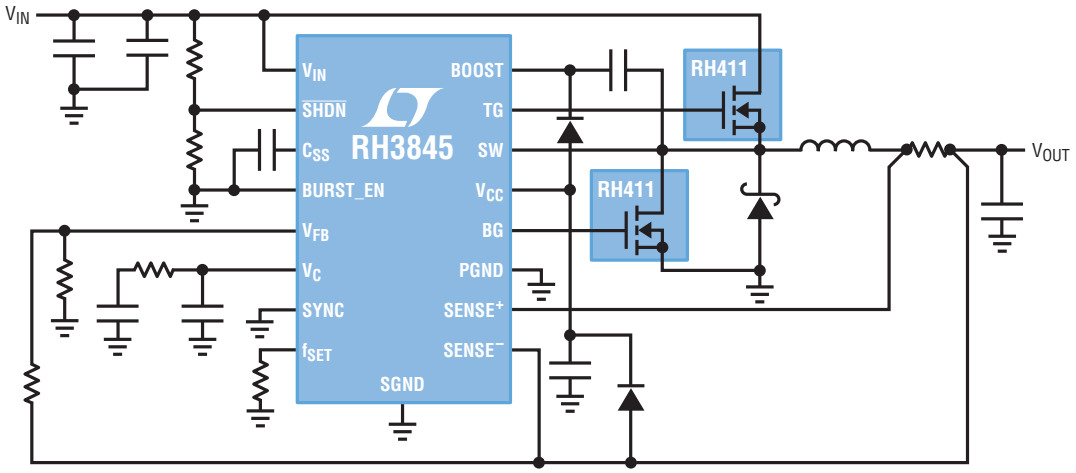

The RH3845MK is a high voltage, synchronous, current mode controller for medium to high power, high efficiency supplies. It offers a wide 4V to 60V input range (7.5V minimum start-up voltage) making it suitable for use in both point-of-load or intermediate bus applications. A kit including dedicated Linear Technology radiation hardened MOSFETs, RH411 is also available to simplify part selection.

Features

- **Processed in Compliance with Linear's Certified MIL-PRF-38535 Class V Flow**
- **High Voltage Operation: Up to 60V**
- **Output Voltages Up to 36V**
- **Efficiency:**
  - **94% for V_{IN} 30V, V_{OUT} 15V at 3A**
  - **88% for V_{IN} 10V, V_{OUT} 3.3V at 3A**
- Synchronizable Up to 600kHz
- Adjustable Constant Frequency:
  - 100kHz to 500kHz
- 70µA Shutdown Supply Current
- Capable of Driving Standard Power MOSFETs
- Short-Circuit Protection and Soft-Start

Radiation Performance

- Total Ionizing Dose (TID) Tolerance, per TM1019.8, MIL-STD-883
  - 200kRad (Si), per Condition A at 50Rads (Si)/sec
  - 100kRad (Si), per Condition D at 10mRads (Si)/sec
  - ELDRS Pass 100kRad (Si)
- Displacement Damage Defect (DDD)
  - Up to 1E12 Neutrons/cm^2
- Single Event Latchup (SEL) Threshold Linear Energy Transfer (LET)
  - 117.6 MeV.cm^2/mg at T_{CASE} = 100°C

Availability

From Linear Technology:

- RH3845MKDICE – 60V Synchronous Current Mode Controller Dice
- RHK3845MKDICE – 60V Synchronous Current Mode Controller Dice + Two RH411 Power NMOS FET Dice

From Anaren (MS Kennedy):

- MSK5055RH – 60V Synchronous Current Mode Controller in 16-Pin Flatpack
- 5962F14223 – 60V Synchronous Current Mode Controller in 16-Pin Flatpack as DLA SMD
- MSK5063RH – 10A, 60V Synchronous Step-Down Regulator in 46-Pin Flatpack with Internal FETs and Decoupling

Low Noise LDO Regulator Protects Against Fault Conditions

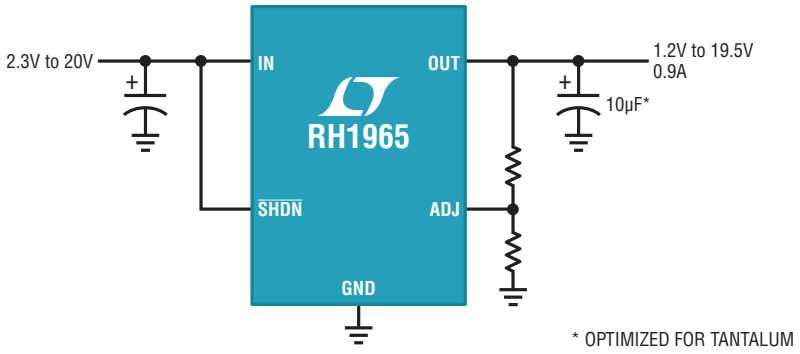

The RH1965 is a radiation hardened low noise low dropout linear regulator with an integrated PNP pass transistor that operates from a single supply of as little as 1.8V. It features extensive internal protection, including current limit with foldback protection, thermal limiting and protection against reverse polarity to safeguard the regulator and the load. A shutdown pin reduces quiescent current to <1µA and the very low output noise makes it ideal for sensitive RF and instrumentation applications.

Features

- **Processed in Compliance with Linear's Certified MIL-PRF-38535 Class V Flow**
- **Output Current: 0.9A**
- **Typical Dropout Voltage: 300mV at 0.9A**
- **Low Noise: 40µV_{RMS} (10Hz to 100kHz)**
- **500µA Quiescent Current**
- Wide Input Voltage Range: 1.8V to 20V
- No Protection Diodes Needed
- Controlled Quiescent Current in Dropout
- Adjustable Output from 1.20V to 19.5V
- < 1µA Quiescent Current in Shutdown
- Stable with 10µF Output Capacitor
- Reverse-Battery Protection
- No Reverse Current
- Current Limit with Foldback Protection
- Thermal Limiting

Radiation Performance

- Total Ionizing Dose (TID) Tolerance, per TM1019.8, MIL-STD-883:
  - 200kRad (Si), per Condition A at 50Rads(Si)/sec
  - 100kRad (Si), per Condition D at 10mRads(Si)/sec
  - ELDRS Pass 100kRad(Si)
- Displacement Damage Defect (DDD) Tolerance
  - Up to 1E12 Neutrons/cm^2
- Single Event Latchup (SEL) Threshold Linear Energy Transfer (LET)
  - To Be Characterized

Availability

RH1965 dice are available from Linear Technology for use in custom hybrids. Packaged products are developed by our trusted partners, Cobham (Aeroflex) and Anaren (MS Kennedy).

- MSK5965 0.9A Low Noise LDO Regulator with Shutdown (FP-10) in Development

Accurate Current Measurement Simplified

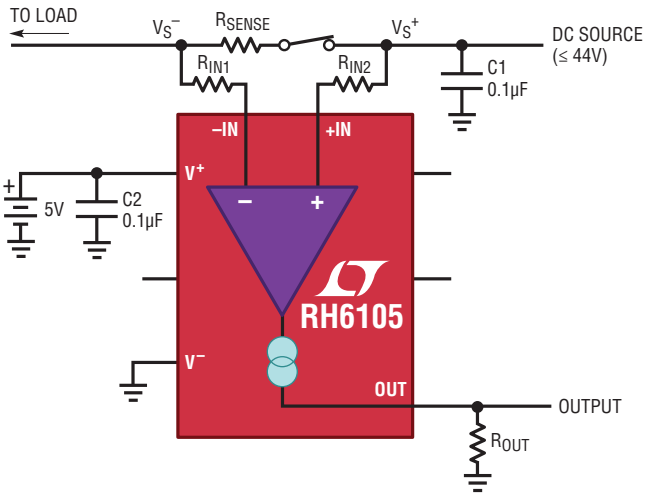

The RH6105 is a precision current sense amplifier that is robust and easy to use. It has a differential input swing capability to ±44V, allowing direct sensing of fuse or MOSFET drops while the input common mode range extends 44V above and 0.3V below V^-. The ability to take common mode down to ground enables low side current sensing and monitoring of negative supply rails. In the absence of power the inputs remain high impedance and continue to present a benign load to the system, even when the circuit is intentionally powered down on a redundant or backup bus.

Features†

- **Processed in Compliance with Linear's Certified MIL-PRF-38535 Class V Flow***
- **Very Wide, Over-The-Top®, Input Common Mode Range**
  - **Extends 44V Above V^- (Independent of V^+)**
  - **Extends –0.3V Below V^-**
- **Wide Power Supply Range: 2.85V to 36V**
- **Input Offset Voltage: 400µV Maximum**
- Gain Accuracy: 1% Maximum
- Resistors Selectable Gain
- Typical Operating Current: 195µA
- Slew Rate: 2V/µs

Radiation Performance*

- Total Ionizing Dose (TID) Tolerance, per TM1019.8, MIL-STD-883:
  - 200kRad (Si), per Condition A at 50Rads (Si)/sec
  - 50kRad (Si), per Condition D at 10mRads (Si)/sec
  - ELDRS Pass 50kRad (Si)
- Displacement Damage Defect (DDD) Up to 1E12 Neutrons/cm^2

Availability

- MSK196RH: Precision Current Sense Amplifier, FP-10 (MIL-PRF-38535 Class V)
- MSK496RH: Quad Precision Current Sense Amplifier, FP-16 (MIL-PRF-38534 Class K**)
- MSK6000RH: Dual High Side Driver with Current Sense, FP-26 (MIL-PRF-38534 Class K)

† Parametric values for MSK196RH.
* Radiation testing and Qualification completed on the packaging vendor's assembled units.
** Contact MSK for qualification status.

Radiation Testing Guide

Linear Technology Radiation Hardened (RH) and Radiation Tolerant (RT) product grades are extensively characterized to determine their responses to various types of radiation. Data sheets and dedicated radiation reports posted online provide comprehensive parametric data for designers and an ongoing program of production testing ensures dependable product performance over many years.

Product Feasibility Study

Initial Total Ionizing Dose (TID) Test	Packaged samples	50-300 RAD(Si)/sec dose rate, incremental dose steps to target spec. Samples are biased and unbiased.
Destructive Single Event Effects (SEE) Characterization	De-capped packaged samples on demo board	Heavy ion testing at elevated temperature to determine Single Event Latch Up (SEL) threshold. Testing typically performed in collaboration with users.

Product Development & Characterization

TID - High Dose Rate (HDR)	Final production die and package combination	50-300 RAD(Si)/sec to 200kRAD(Si) accumulated dose. Biased and unbiased samples from multiple lots
Displacement Damage Defects (DDD) Characterization	Final production die and package combination	MIL-STD-883 TM 1017, target is a total fluence of 1E12 N/cm^2, 5 unbiased samples + 2 control samples. Test samples must pass data sheet limits
Non-Destructive SEE Characterization	Final production die in a de-capped package	Heavy ion tests to characterized non-destructive effects including Single Event Transients (SET), Single Event Functional Interrupt (SEFI), Single Event Upsets (SEU), etc.

Production Testing

Radiation Lot Monitor	Production samples selected at random, test is performed on every wafer	TID, 50-300 RAD(Si)/sec dose rate, to data sheet limit, 10 samples biased during irradiation for internal lot qualification purposes
Radiation Lot Acceptance Test (HDR)	Production samples selected at random, test is performed on every wafer	TID, MIL-STD-883 TM 1019, 50-300 RAD(Si)/sec (Cond A) to data sheet limit accumulated dose. 5 biased, 5 unbiased samples + control sample
TID - High Dose Rate (HDR) and Low Dose Rate (LDR) Test with ELDRS Assessment	Production samples selected at random, test is performed once per wafer lot	MIL-STD-883 TM 1019, 50-300 RAD(Si)/sec (Cond A) and 10mRAD(Si)/sec (Cond D), to 50k or 100kRAD(Si) accumulated dose. 5 biased, 5 unbiased samples per test + control sample. Test samples must pass data sheet limits

This document is intended to provide an overview and due to the complex nature of radiation testing, the tests implemented will vary by product type. Please refer to published radiation reports for more details of the test methods and conditions.

QML Class V Products

AMPLIFIERS					
SMD NUMBER	**LTC PART NUMBER**	**DESCRIPTION**	**SUPPLIER**	**PACKAGE**	**LTC SCD**
5962R1325001V9A	RH1498DICE	Dual, 10MHz GBW, 6V/µs Rail-to-Rail, Precision C-Load™ Op Amp	LTC	DICE	05-08-5208
5962R1325001VHA	RH1498MW	Dual, 10MHz GBW, 6V/µs Rail-to-Rail, Precision C-Load Op Amp	LTC	FP-10	05-08-5201
5962R1325101VDA	RH1499MW	Quad, 10MHz GBW, 6V/µs Rail-to-Rail, Precision C-Load Op Amp	LTC	FP-14	05-08-5199
5962R8876003V9A	RH1013DICE	Dual, 500kHz GBW, Precision, 300µV Offset Op Amp	LTC	DICE	05-08-5112
5962R8876003VHA	RH1013MW	Dual, 500kHz GBW, Precision, 300µV Offset Op Amp	LTC	FP-10	05-08-5013
5962R8967703VDA	RH1014MW	Quad, 500kHz GBW, Precision, 300µV Offset Op Amp	LTC	FP-14	05-08-5014
VOLTAGE REFERENCES					
SMD NUMBER	**LTC PART NUMBER**	**DESCRIPTION**	**SUPPLIER**	**PACKAGE**	**LTC SCD**
5962R8860001VGA	RH1021BMH-10	Precsion 10V Reference	LTC	TO-5	05-08-5018
5962R8860002V9A	RH1021C-10DICE	Precsion 10V Reference	LTC	DICE	05-08-5118
5962R8860002VGA	RH1021CMH-10	Precsion 10V Reference	LTC	TO-5	05-08-5018
5962R8860002VHA	RH1021CMW-10	Precsion 10V Reference	LTC	FP-10	05-08-5018
5962R8876201VGA	RH1021BMH-5	Precsion 5V Reference	LTC	TO-5	05-08-5016
5962R8876202V9A	RH1021C-5 DICE	Precsion 5V Reference	LTC	DICE	05-08-5117
5962R8876202VGA	RH1021CMH-5	Precsion 5V Reference	LTC	TO-5	05-08-5016
5962R8876202VHA	RH1021CMW-5	Precsion 5V Reference	LTC	FP-10	05-08-5016
5962R8961002V9A	RH1009MDICE	Precision 2.5V Reference	LTC	DICE	05-08-5115
5962R8961002VHA	RH1009MW	Precision 2.5V Reference	LTC	FP-10	05-08-5011
5962R8961002VXC	RH1009MH	Precision 2.5V Reference	LTC	TO-46	05-08-5011
LINEAR REGULATORS					
SMD NUMBER	**LTC PART NUMBER**	**DESCRIPTION**	**SUPPLIER**	**PACKAGE**	**SUPPLIER PART NUMBER**
5962F0824601	RH1573KDICE	Voltage Regulator 3A, 1.8V Output	MSK	FP-8	MSK 5823-1.8
5962F0824602	RH1573KDICE	Voltage Regulator 3A, 2.5V Output	MSK	FP-8	MSK 5823-2.5
5962F0920801	RH1573KDICE	Voltage Regulator 3A, Adjustable Output, Optimized for 3.3V Input	MSK	FP-8	MSK 5824
5962F0920901	RH1573KDICE	Voltage Regulator 3A, 2.5V Output, Optimized for 5V Input	MSK	FP-8	MSK 5825-2.5
5962F0920901	RH1573KDICE	Voltage Regulator 3A, 3.3V Output, Optimized for 5V Input	MSK	FP-8	MSK 5825-3.3
5962F0921001	RH1573KDICE	Voltage Regulator 3A, Adjustable Output, Optimized for 5V Input	MSK	FP-8	MSK 5826
5962F09216xx	RH1573KDICE	Voltage Regulator 4A / 5A, Various Output Voltages & Adjustable	MSK	TO-254, FP-12, FP-20	MSK 5800, 5810, 5821, 5820-x.x
5962F09236xx	RH1573KDICE	Voltage Regulator 5A, Various Output Voltages	MSK	TO-254	MSK 5822-x.x
5962R05219xx	RH117KDICE RH137KDICE	Dual Voltage Regulators, 1.5A + 1.5A, Various Positive & Negative Combinations	AEROFLEX	TO-257	VRG 8601, 8602, 8603, 8604, 8607, 8608, 8609, 8610
5962R0920101	RH1086BKKDICE RH1185AMKDICE	Dual Voltage Regulators 1A Positive + 3A Negative	AEROFLEX	TO-257	VRG 8651, 8652
5962R0920102	RH1086BKKDICE	Dual Voltage Regulator 1A + 1A, Adjustable Output	AEROFLEX	TO-257	VRG 8657, 8658
5962R0920701	RH1086BKKDICE	Voltage Regulator 1A	AEROFLEX	SMD 5 Pad	VRG 8662
5962R0920702	RH1185AMKDICE	Voltage Regulator 3A Negative	AEROFLEX	SMD 5 Pad	VRG 8663
5962R0921101	RH1086BKKDICE	Voltage Regulator 1.5A	MSK	SMD-1, TO-257	MSK 5970
5962R0921201	RH1085MKDICE	Voltage Regulator 3A	MSK	SMD-1, TO-257	MSK 5971
5962R0921301	RH117KDICE	Voltage Regulator 1.5A	MSK	SMD-1, TO-257	MSK 5972
5962R0921401	RH137KDICE	Voltage Regulator 1.5A Negative	MSK	SMD-1, TO-257	MSK 5973
5962R0924501	RH1084MKDICE	Voltage Regulator 3A	AEROFLEX	SMD-0.5	VRG 8684
5962R1021301	RH1084MKDICE RH1185AMKDICE	Dual Voltage Regulator, 3A Positive + 3A Negative	AEROFLEX	TO-257	VRG 8653, 8654
5962R1021302	RH1084MKDICE	Dual Voltage Regulator, 3A + 3A	AEROFLEX	TO-257	VRG 8687, 8688
5962R1120501	RH3080MKDICE	Voltage Regulator 1A, Adjustable Output, Single Resistor	AEROFLEX	SMD 5 Pad	VRG 8666
5962R1320301	RH3080MKDICE x 2	Dual Voltage Regulator 1A + 1A, Adjustable Output, Single Resistor	AEROFLEX	TO-257	VRG 8667, 8668
5962R1420101	RH3083MKDICE	Voltage Regulator 2.5A, Adjustable Output, Single Resistor	AEROFLEX	SMD 5 Pad	VRG 8669
5962R1420201	RH3083MKDICE x 2	Dual Voltage Regulator 2.5A + 2.5A, Adjustable Output, Single Resistor	AEROFLEX	TO-257	VRG 8697, 8698
SWITCHING REGULATORS & CONTROLLERS					
SMD NUMBER	**RH3083MKDICE**	**DESCRIPTION**	**SUPPLIER**	**PACKAGE**	**SUPPLIER PART NUMBER**
5962F1422301	RH3845MKDICE	Switching Controller, up to 60V Input, Sync to 600kHz	MSK	FP-16	MSK 5055-1
5962F1422302	RH3845MKDICE	Switching Controller, up to 60V Input, Sync to 600kHz, Reverse Current Enabled	MSK	FP-16	MSK 5055-2
5962R1123101	RH1959MILDICE	Switching Regulator 3.5A, up to 16V Input, 500kHz	MSK	TO-254	MSK 5044
5962R1123201	RH1959MILDICE	Switching Regulator 3.5A, up to 16V Input, 500kHz with Sync	MSK	TO-254	MSK 5048
5962R1123401	RH1959MILDICE	Switching Regulator 4.5A, up to 16V Input, 500kHz	MSK	FP-16	MSK 5059

KEY:

LTC SMDs
MSK / AEROFLEX SMDs

Radiation Hardened Product Range

AMPLIFIERS						
Part Type	**SMD**	**Description**	**Configuration**	**Typical GBW (MHz)**	**Package**	**Partner Products**
RH101A		General Purpose	Single	0.1	DICE, TO-5, DIP-8, FP-10	MSK0041, MSK106
RH1078		Micropower, 120µV Offset	Dual	0.2	DICE, TO-5, DIP-8, FP-10	
RH07		Precision	Single	0.4	DICE, TO-5, DIP-8, FP-10	
RH108A		General Purpose	Single	0.5	DICE, TO-5, DIP-8, FP-10	
RH1013	5962R88760	Precision, 300µV Offset	Dual	0.5	DICE, TO-5, DIP-8, FP-10	
RH1014	5962R89677	Precision, 300µV Offset	Quad	0.5	DIP-14, FP-14	
RH6105		Rail-to-Rail Current Sense	Single	1.0	DICE	MSK196, MSK496 (Quad), MSK6000 Dual High-Side Driver
RH27A		Precision, 35µV Offset	Single	5.0	FP-10	
RH27		Precision, 55µV and 100µV Offset	Single	5.0	DICE, TO-5, DIP-8, FP-10	
RH1056A		Precision High Speed JFET Input	Single	6.5	TO-5, FP-10	
RH1056		Precision High Speed JFET Input	Single	6.5	DICE	
RH1498	5962R13250	6V/µs Rail-to-Rail, Precision C-Load	Dual	10	DICE, FP-10	MSK198
RH1499	5962R13251	6V/µs Rail-to-Rail, Precision C-Load	Quad	10	FP-14	
RH118		Precision, High Speed	Single	15	TO-5, DIP-8, FP-10	
RH1128		Ultralow Noise, $A_V \geq 1$	Single	20	DICE, FP-10	
RH37		Precision	Single	45	DICE, TO-5, DIP-8, FP-10	
RH1028		Ultralow Noise, $A_V \geq 2$ or $A_V \leq -1$	Single	75	DICE, FP-10	
RH1814		High Speed 750V/µs, 3mA	Dual	100	DICE	
RH1814		High Speed 750V/µs, 3mA	Quad	100	FP-14	
RH6200		Low Noise, 0.95nV/√Hz, Rail-to-Rail	Single	165	DICE, FP-10	
COMPARATORS						
Part Type	**SMD**	**Description**	**Configuration**	**Typical t_{PD} (nS)**	**Package**	**Partner Products**
RH1016		UltraFast™ Precision	Single	10	DICE, FP-10	
RH119		High Performance	Dual	80	DICE, TO-5, DIP-8, FP-10	
RH1011		Precision	Single	150	DICE, TO-5, DIP-8, FP-10	
RH111		Please Use RH1011 for New Designs	Single	200	TO-5, DIP-8, FP-10	
VOLTAGE REFERENCES						
Part Type	**SMD**	**Description**	**V_{OUT}**	**T.C. Max ppm/ °C**	**Package**	**Partner Products**
RH1034-1.2		Micropower	1.2 + 7 Aux	60	TO-46, FP-10	
RH1009	5962R89610	Precision	2.5	35	DICE, TO-46, FP-10	MSK109, MSK110 (Dual)
RH1021-5	5962R88762	Precision	5	5-20	DICE, TO-5, FP-10	
RH129A		Precision	6.9	10	TO-46	
RH1021-7		Precision	7	5-20	TO-5	
RH1021-10	5962R88600	Precision	10	5-20	DICE, TO-5, FP-10	
DATA CONVERTORS						
Part Type	**SMD**	**Description**	**Resolution**	**F_S (ksps)**	**Package**	**Partner Products**
LTC1604		Sampling ADC with Shutdown	16-Bit	333	SSOP-36	
LTC1419A		Sampling ADC with Shutdown	14-Bit	800	DICE	RAD1419
VOLTAGE REGULATOR DRIVER						
Part Type	**SMD**	**Description**	**V_{IN} Max**	**I_{OUT} (A)**	**Package**	**Partner Products**
RH1573		Up to 5A with External PNP	10	1.0	DICE	MSK5800, MSK5805, MSK5810, MSK5820, MSK5821, MSK5822, MSK5823, MSK5824, MSK5825, MSK5826, MSK5950
POSITIVE LINEAR REGULATORS						
Part Type	**SMD**	**Description**	**V_{IN} Max**	**I_{OUT} (A)**	**Package**	**Partner Products**
RH1086H		Adjustable	25	0.5	DICE, TO-39	
RH117H		Adjustable	40	0.5	DICE, TO-39	
RH3080		Adjustable, Single Resistor	40	0.9	DICE	MSK5976, MSK5978, MSK5979, VRG8666, Dual Regulators: MSK5953, VRG8667, VRG8668
RH1965		Adjustable, with Shutdown	20	1.0	DICE	MSK5965
RH1086K		Adjustable	25	1.5	DICE, TO-3	MSK5970, VRG8662, Dual Regulators: VRG8657, VRG8658, Positive + Negative Regulators: VRG8651, VRG8652
RH117K		Adjustable	40	1.5	DICE, TO-3	MSK5972, VRG8660, Dual Regulators: VRG8607, VRG8608, Positive + Negative Regulators: MSK5911, MSK5912, MSK5913, MSK5914, MSK5915, MSK5916, MSK5917, MSK5918, MSK5919, VRG8601, VRG8602
RH3083		Adjustable, Single Resistor	18	2.8	DICE	MSK5983, MSK5984, MSK5985, MSK5986, VRG8669, VRG8697, VRG8698
RH1085		Adjustable	30	3.0	DICE, TO-3	MSK5971, Positive + Negative Regulators: MSK5930, MSK5931, MSK5932, MSK5933, MSK5934, MSK5935, MSK5936, MSK5937, MSK5938, MSK5939
RH1084		Adjustable	25	5.0	DICE	VRG8684, Dual Regulators: VRG8687, VRG8688, Positive + Negative Regulators: VRG8653, VRG8654
NEGATIVE LINEAR REGULATORS						
Part Type	**SMD**	**Description**	**V_{IN} Max**	**I_{OUT} (A)**	**Package**	**Partner Products**
RH137H		Adjustable	30	0.5	DICE, TO-39	
RH137K		Adjustable	30	1.5	DICE, TO-3	MSK5973, VRG8661, Dual Regulators: VRG8609, VRG8610, Positive + Negative Regulators: MSK5911, MSK5912, MSK5913, MSK5914, MSK5915, MSK5916, MSK5917, MSK5918, MSK5919, VRG8601, VRG8602
RH1185A		Adjustable with Current Limit	35	3.0	DICE, TO-3	MSK5940, VRG8663, Positive + Negative Regulators: MSK5930, MSK5931, MSK5932, MSK5933, MSK5934, MSK5935, MSK5936, MSK5937, MSK5938, MSK5939, VRG8651, VRG8652, VRG8653, VRG8654
SWITCHING REGULATORS AND CONTROLLERS						
Part Type	**SMD**	**Description**	**V_{IN} Max**	**I_{OUT} (A)**	**Package**	**Partner Products**
RH1959		500kHz Step-Down Switching Regulator	16	4.5	DICE	MSK5044, MSK5048, MSK5052, MSK5059
RH3845		Sync Step-Down Controller, 100kHz to 500kHz	60	10	DICE	MSK5055 Switching Controller IC
RHK3845		RH3845 Controller + 2xRH411 NMOS FETs	60	10	3 x DICE	MSK5063 Switching Regulator Module

Notes: Partner products are built using LTC RHDICE and sold by ANAREN INC. formerly MS KENNEDY CORP. (MSK prefix) and COBHAM plc formerly AEROFLEX MICROELECTRONIC SOLUTIONS (VRG and RAD prefix).
LTC SMD references are shown, please contract LTC for latest status, SMD references for MSK, VRG and RAD part numbers are available on line.

Websites: http://www.linear.com/products/Space_Qualified_Products
http://mskennedy.com/products/Rad-Hard-Products
http://ams.aeroflex.com/pagesproduct/prods-hirel-voltage.cfm

www.linear.com/rhspace ▪ 1-800-4-LINEAR

LINEAR TECHNOLOGY | NOW PART OF ANALOG DEVICES

0617A