THIS DRAWING IS THE PROPERTY OF ANALOG DEVICES INC. IT IS NOT TO BE REPRODUCED OR COPIED, IN WHOLE OR IN PART, OR USED IN FURNISHING INFORMATION TO OTHERS, OR FOR ANY OTHER PURPOSE DETRIMENTAL TO THE INTERESTS OF ANALOG DEVICES.
THE EQUIPMENT SHOWN HEREON MAY BE PROTECTED BY PATENTS OWNED OR CONTROLLED BY ANALOG DEVICES.

RELAY CONTROL CHART

CONTROL	CODE	DEVICE	FUNCTION	CONNECTOR

REVISIONS			
REV	DESCRIPTION	DATE	APPROVED

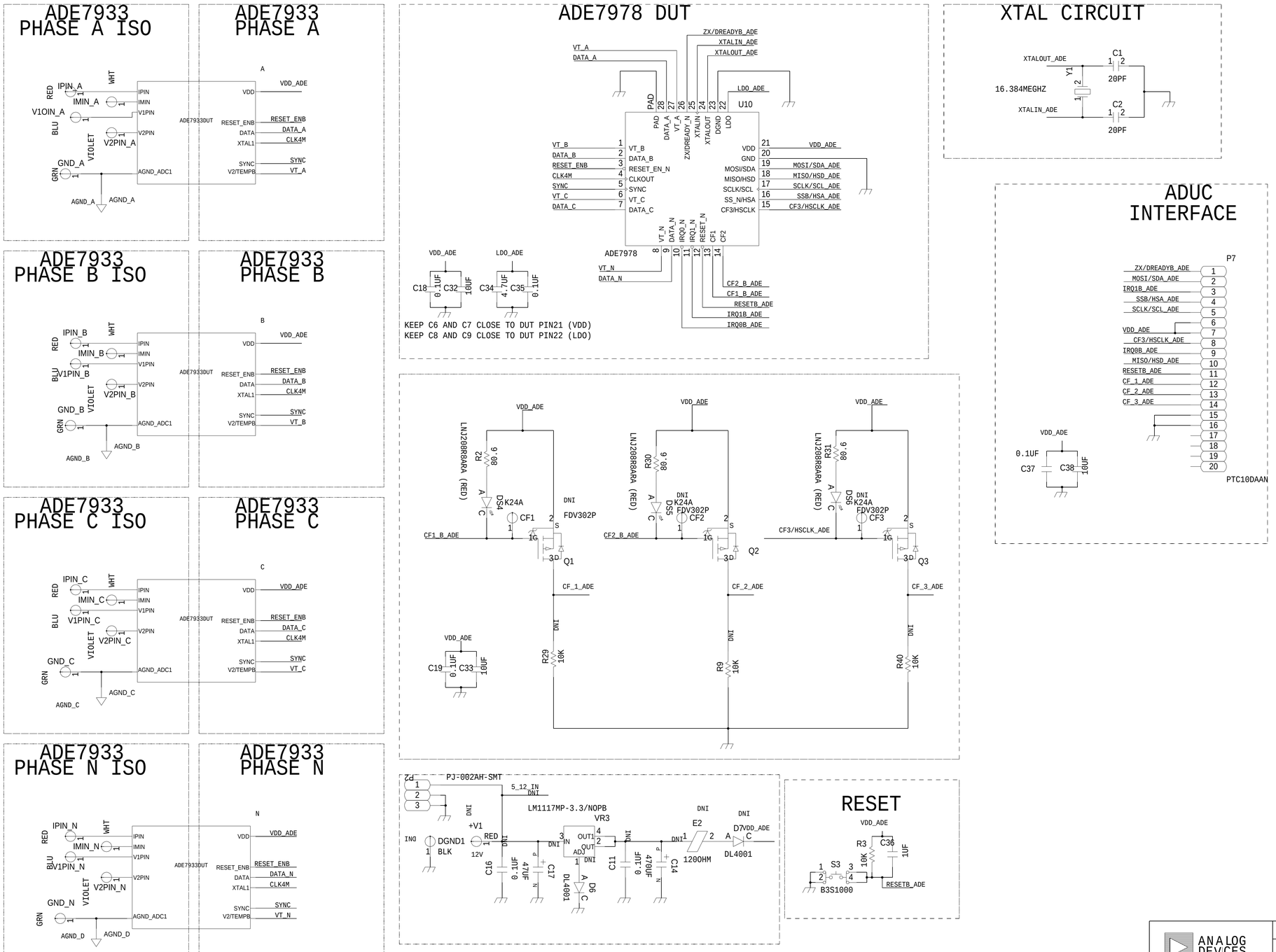

ANALOG DEVICES

THIS DRAWING IS THE PROPERTY OF ANALOG DEVICES INC. IT IS NOT TO BE REPRODUCED OR COPIED, IN WHOLE OR IN PART, OR USED IN FURNISHING INFORMATION TO OTHERS, OR FOR ANY OTHER PURPOSE DETRIMENTAL TO THE INTERESTS OF ANALOG DEVICES.
THE EQUIPMENT SHOWN HEREIN MAY BE PROTECTED BY PATENTS OWNED OR CONTROLLED BY OWNED ANALOG DEVICES.

SCHEMATIC

HW TYPE : EVAL Board
Product(s): ADE7933

DESIGN VIEW	DRAWING NO.	REV
<DESIGN_VIEW>	02-034694	G

PTD ENGINEER	SIZE	SCALE	SHEET
D SMITH	D	1:1	2 OF 7

REVISIONS			
REV	DESCRIPTION	DATE	APPROVED

THIS IS THE SDP INTERFACE BD
THIS ADAPTS THE METROLOGY BD TO THE SDP AS AN EVAL BD

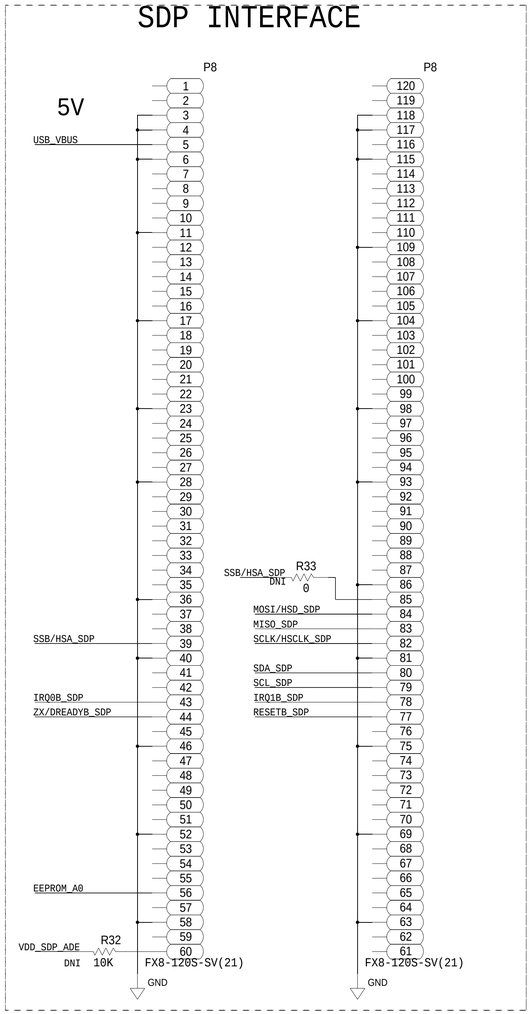

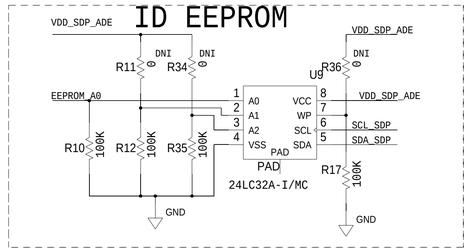

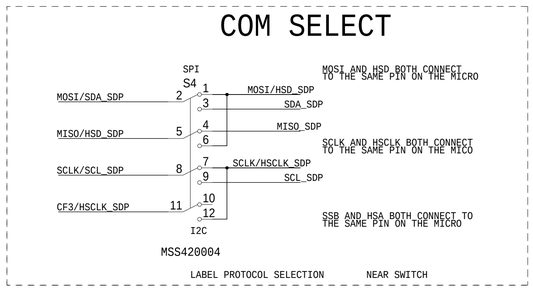

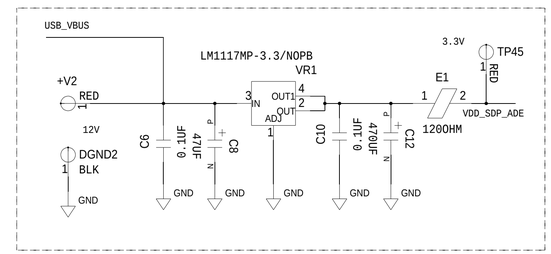

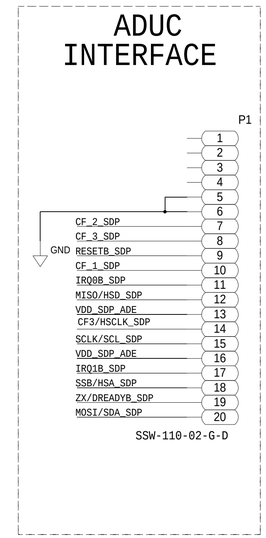

THIS DRAWING IS THE PROPERTY OF ANALOG DEVICES INC. IT IS NOT TO BE REPRODUCED OR COPIED, IN WHOLE OR IN PART, OR USED IN FURNISHING INFORMATION TO OTHERS, OR FOR ANY OTHER PURPOSE DETRIMENTAL TO THE INTERESTS OF ANALOG DEVICES.
THE EQUIPMENT SHOWN HEREIN MAY BE PROTECTED BY PATENTS OWNED OR CONTROLLED BY OWNED ANALOG DEVICES.

ANALOG DEVICES

SCHEMATIC

HW TYPE : EVAL Board
Product(s): ADE7933

DESIGN VIEW	DRAWING NO.	REV
<DESIGN_VIEW>	02-034694	G

PTD ENGINEER	SIZE	SCALE	SHEET 3 OF 7
D SMITH	D	1:1	

REVISIONS			
REV	DESCRIPTION	DATE	APPROVED

SECONDARY(ISO)SIDE

PRIMARY SIDE

ANALOG INPUT PER PHASE

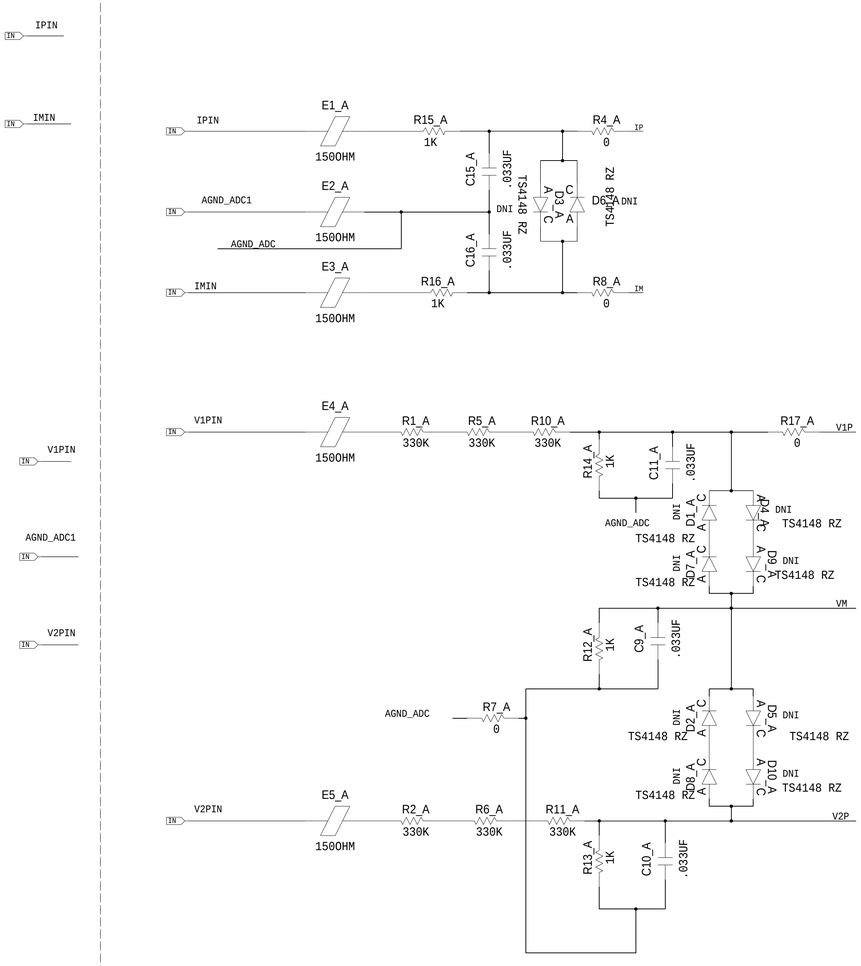

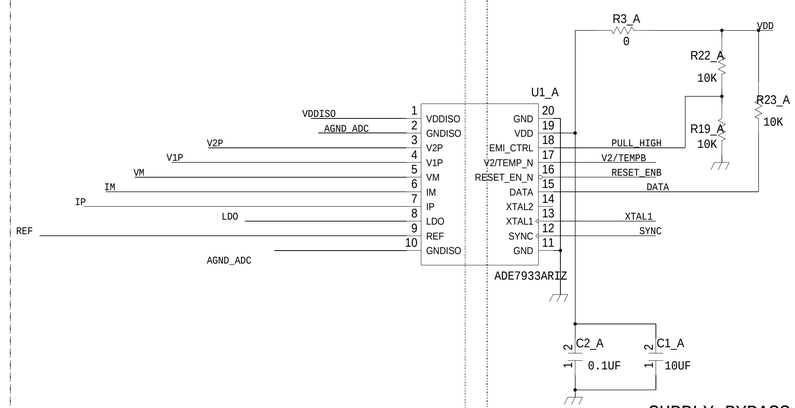

SUPPLY BYPASS

LAYOUT NOTE:
KEEP THE VDD BYPASS CAP CLOSE TO DUT PIN19
NOTE:KEEP THE HIGH FREQ BYPASS CAP(0.1UF) CLOSE TO THE DUT PIN

NOTE: C19_X FOR SOLDERED DOWN VERSION ONLY

LAYOUT NOTE:
KEEP THE R9 0OHM RES CLOSEST TO PIN 10 AGND_ADC

SUPPLY BYPASS

CLOSE TO PIN 1 CLOSE TO PIN 8 CLOSE TO PIN 9

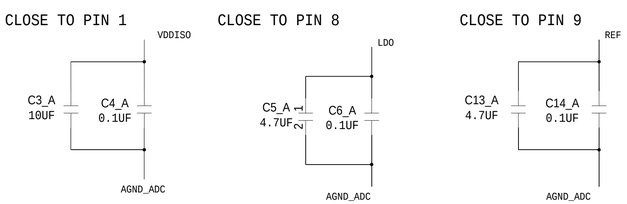

LAYOUT NOTE:
1. KEEP THE BYPASS CAP CIRCUITS CLOSE TO THE DUT PINS IN THE FOLLOWING ORDER
A.) REF B)LDO C.)VDDISO AND WITH HIGH FREQ. CAPS(0.1UF) CLOSEST
2. C11, C15 AND C18 FOR SOLDERED DOWN VERSION.

ANALOG DEVICES

THIS DRAWING IS THE PROPERTY OF ANALOG DEVICES INC. IT IS NOT TO BE REPRODUCED OR COPIED, IN WHOLE OR IN PART, OR USED IN FURNISHING INFORMATION TO OTHERS, OR FOR ANY OTHER PURPOSE DETRIMENTAL TO THE INTERESTS OF ANALOG DEVICES.
THE EQUIPMENT SHOWN HEREIN MAY BE PROTECTED BY PATENTS OWNED OR CONTROLLED BY OWNED ANALOG DEVICES.

SCHEMATIC

HW TYPE : EVAL Board
Product(s): ADE7933

DESIGN VIEW	DRAWING NO.	REV
<DESIGN_VIEW>	02-034694	G

PTD ENGINEER	SIZE	SCALE	SHEET 4 OF 7
D SMITH	D	1:1	

REVISIONS			
REV	DESCRIPTION	DATE	APPROVED

SECONDARY(ISO)SIDE

PRIMARY SIDE

ANALOG INPUT PER PHASE

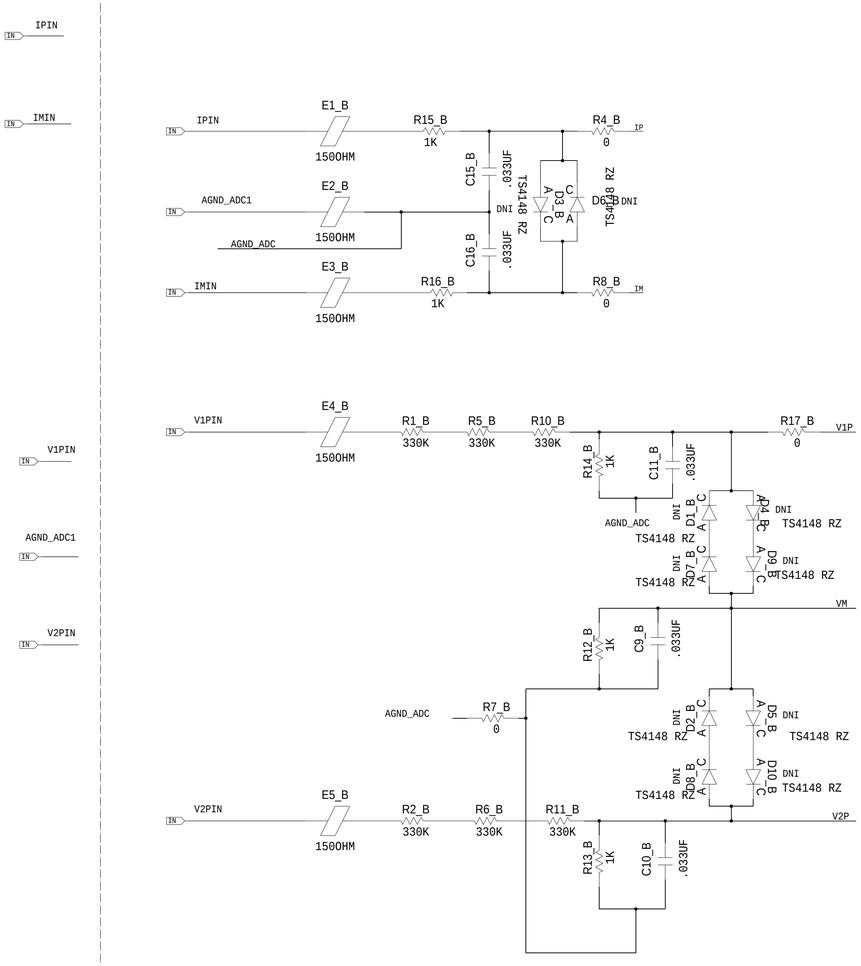

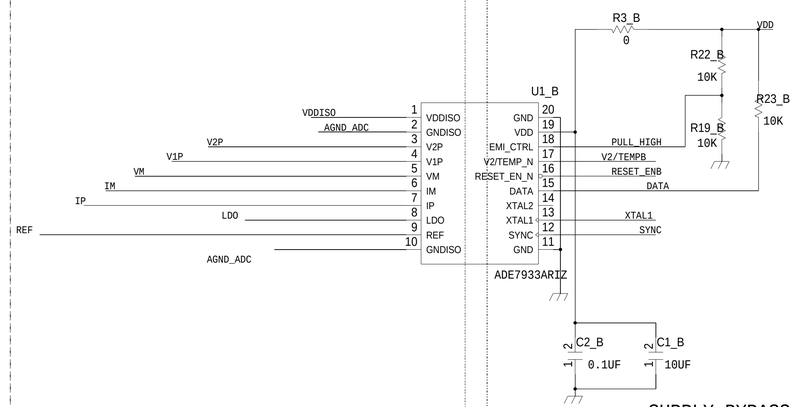

SUPPLY BYPASS

LAYOUT NOTE:
KEEP THE VDD BYPASS CAP CLOSE TO DUT PIN19
NOTE:KEEP THE HIGH FREQ BYPASS CAP(0.1UF) CLOSE TO THE DUT PIN

NOTE: C19_X FOR SOLDERED DOWN VERSION ONLY

LAYOUT NOTE:
KEEP THE R9 0OHM RES CLOSEST TO PIN 10 AGND_ADC

SUPPLY BYPASS

CLOSE TO PIN 1 | CLOSE TO PIN 8 | CLOSE TO PIN 9

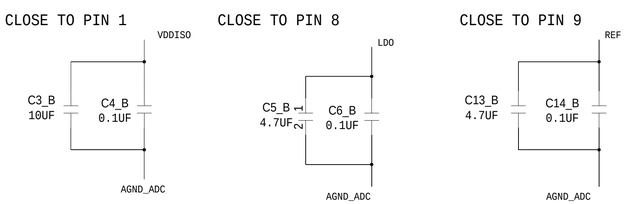

LAYOUT NOTE:
1. KEEP THE BYPASS CAP CIRCUITS CLOSE TO THE DUT PINS IN THE FOLLOWING ORDER
A.) REF B)LDO C.)VDDISO AND WITH HIGH FREQ. CAPS(0.1UF) CLOSEST
2. C11, C15 AND C18 FOR SOLDERED DOWN VERSION.

ANALOG DEVICES

THIS DRAWING IS THE PROPERTY OF ANALOG DEVICES INC. IT IS NOT TO BE REPRODUCED OR COPIED, IN WHOLE OR IN PART, OR USED IN FURNISHING INFORMATION TO OTHERS, OR FOR ANY OTHER PURPOSE DETRIMENTAL TO THE INTERESTS OF ANALOG DEVICES.
THE EQUIPMENT SHOWN HEREON MAY BE PROTECTED BY PATENTS OWNED OR CONTROLLED BY OWNED ANALOG DEVICES.

SCHEMATIC

HW TYPE : EVAL Board
Product(s): ADE7933

DESIGN VIEW	DRAWING NO.	REV
<DESIGN_VIEW>	02-034694	G

PTD ENGINEER	SIZE	SCALE	SHEET 5 OF 7
D SMITH	D	1:1	

REVISIONS			
REV	DESCRIPTION	DATE	APPROVED

SECONDARY(ISO)SIDE

ANALOG INPUT PER PHASE

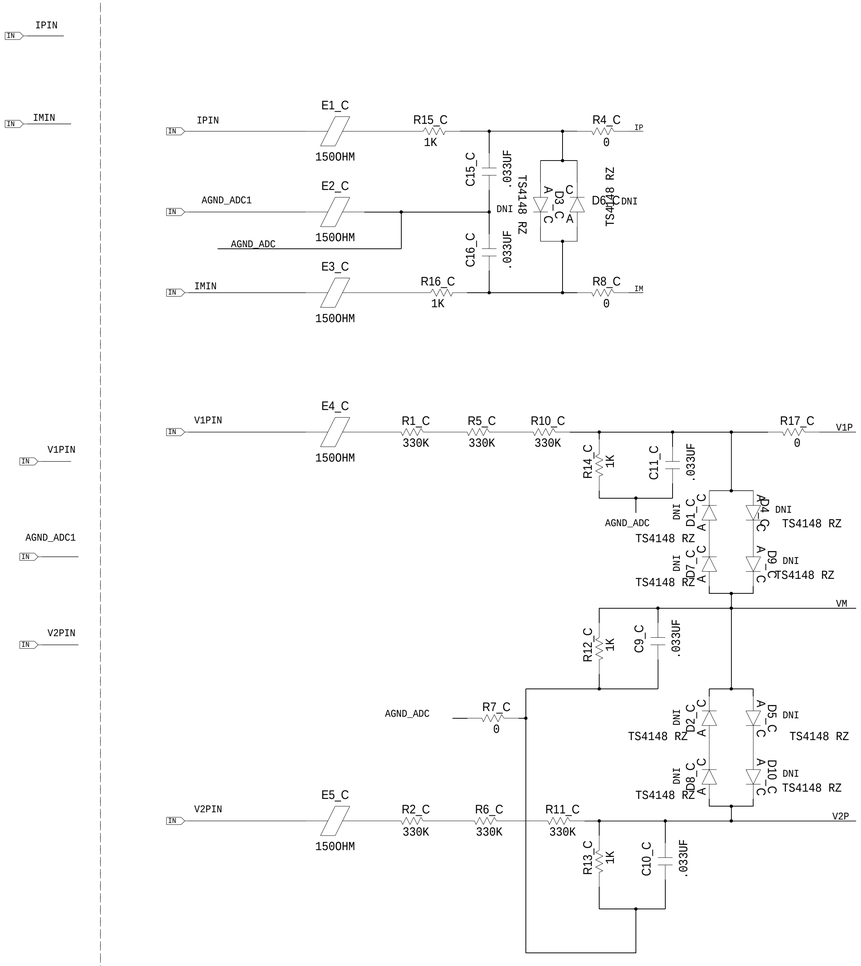

SUPPLY BYPASS

LAYOUT NOTE:
KEEP THE R9 0OHM RES CLOSEST TO PIN 10 AGND_ADC

CLOSE TO PIN 1 CLOSE TO PIN 8 CLOSE TO PIN 9

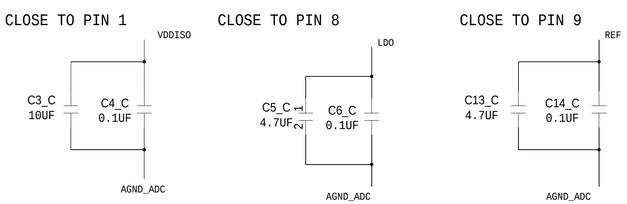

LAYOUT NOTE:
1. KEEP THE BYPASS CAP CIRCUITS CLOSE TO THE DUT PINS IN THE FOLLOWING ORDER
A.) REF B)LDO C.)VDDISO AND WITH HIGH FREQ. CAPS(0.1UF) CLOSEST
2. C11, C15 AND C18 FOR SOLDERED DOWN VERSION.

PRIMARY SIDE

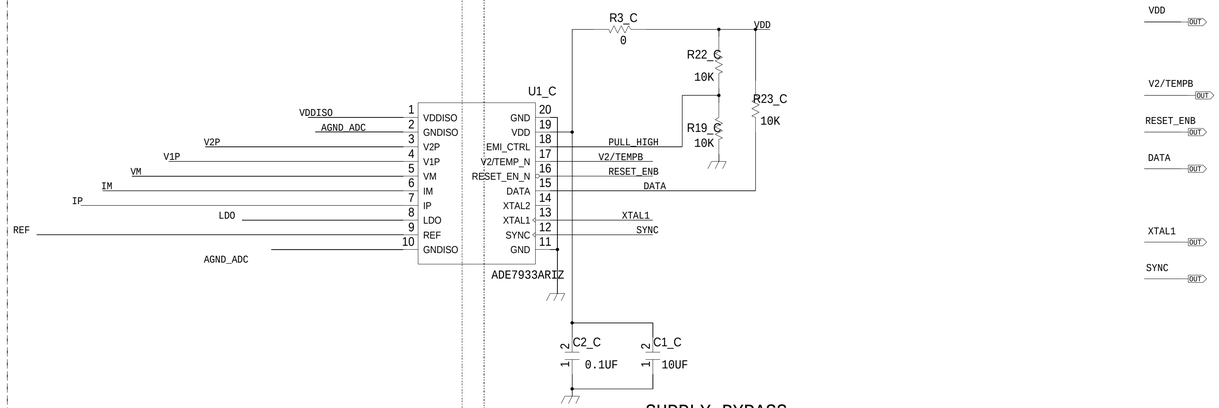

SUPPLY BYPASS

LAYOUT NOTE:
KEEP THE VDD BYPASS CAP CLOSE TO DUT PIN19
NOTE:KEEP THE HIGH FREQ BYPASS CAP(0.1UF) CLOSE TO THE DUT PIN

NOTE: C19_X FOR SOLDERED DOWN VERSION ONLY

ANALOG DEVICES

THIS DRAWING IS THE PROPERTY OF ANALOG DEVICES INC. IT IS NOT TO BE REPRODUCED OR COPIED, IN WHOLE OR IN PART, OR USED IN FURNISHING INFORMATION TO OTHERS, OR FOR ANY OTHER PURPOSE DETRIMENTAL TO THE INTERESTS OF ANALOG DEVICES.
THE EQUIPMENT SHOWN HEREIN MAY BE PROTECTED BY PATENTS OWNED OR CONTROLLED BY OWNED ANALOG DEVICES.

SCHEMATIC

HW TYPE : EVAL Board
Product(s): ADE7933

DESIGN VIEW	DRAWING NO.	REV
<DESIGN_VIEW>	02-034694	G

PTD ENGINEER	SIZE	SCALE	SHEET 6 OF 7
D SMITH	D	1:1	

REVISIONS			
REV	DESCRIPTION	DATE	APPROVED

SECONDARY(ISO)SIDE

PRIMARY SIDE

ANALOG INPUT PER PHASE

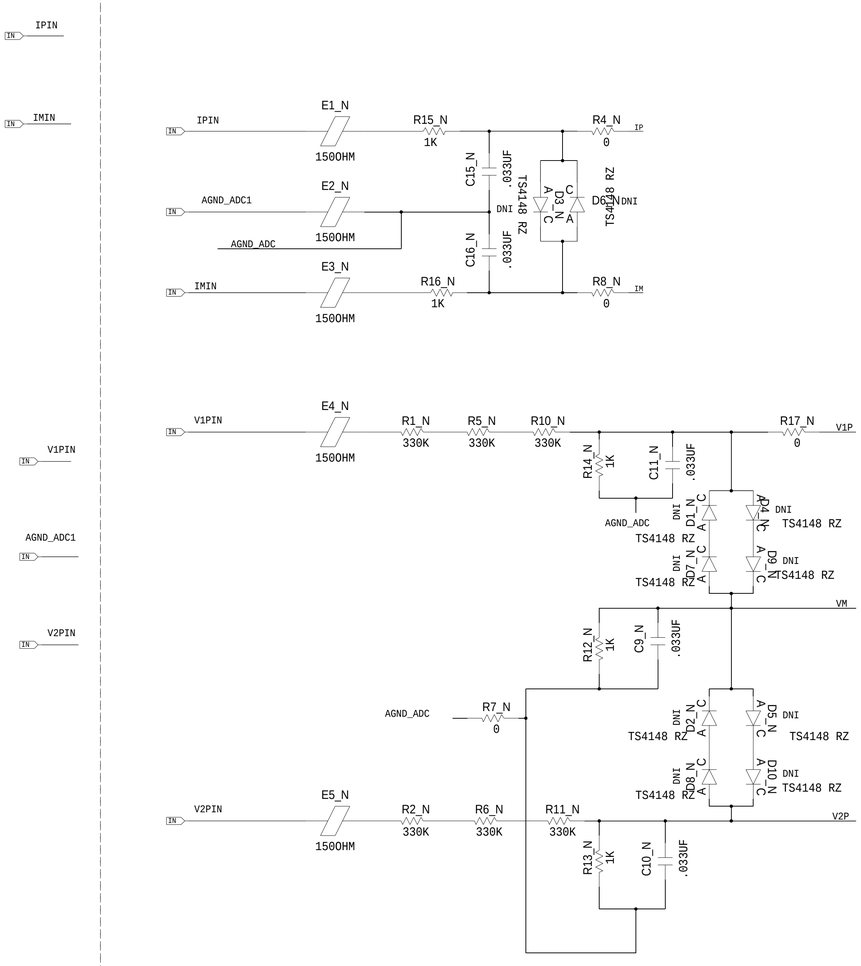

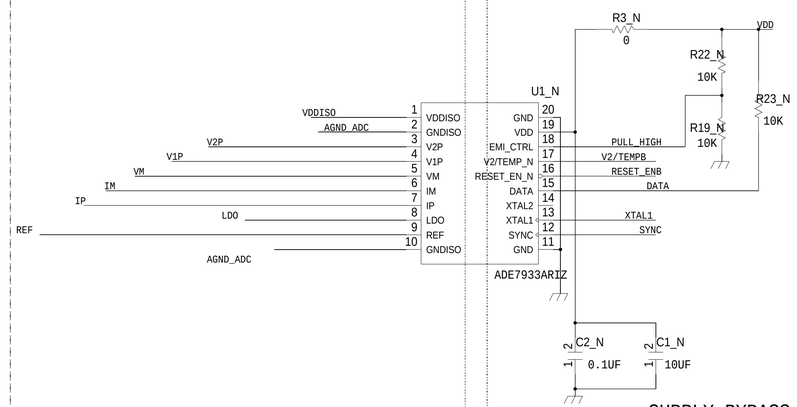

SUPPLY BYPASS

LAYOUT NOTE:
KEEP THE VDD BYPASS CAP CLOSE TO DUT PIN19
NOTE:KEEP THE HIGH FREQ BYPASS CAP(0.1UF) CLOSE TO THE DUT PIN

NOTE: C19_X FOR SOLDERED DOWN VERSION ONLY

LAYOUT NOTE:
KEEP THE R9 0OHM RES CLOSEST TO PIN 10 AGND_ADC

SUPPLY BYPASS

CLOSE TO PIN 1 CLOSE TO PIN 8 CLOSE TO PIN 9

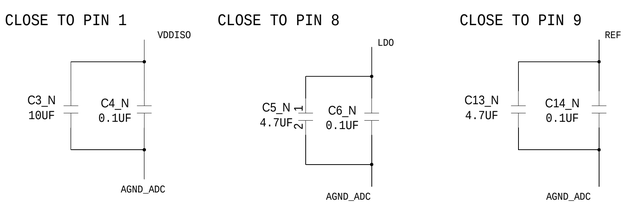

LAYOUT NOTE:
1. KEEP THE BYPASS CAP CIRCUITS CLOSE TO THE DUT PINS IN THE FOLLOWING ORDER
A.) REF B)LDO C.)VDDISO AND WITH HIGH FREQ. CAPS(0.1UF) CLOSEST
2. C11, C15 AND C18 FOR SOLDERED DOWN VERSION.

ANALOG DEVICES

THIS DRAWING IS THE PROPERTY OF ANALOG DEVICES INC. IT IS NOT TO BE REPRODUCED OR COPIED, IN WHOLE OR IN PART, OR USED IN FURNISHING INFORMATION TO OTHERS, OR FOR ANY OTHER PURPOSE DETRIMENTAL TO THE INTERESTS OF ANALOG DEVICES.
THE EQUIPMENT SHOWN HEREIN MAY BE PROTECTED BY PATENTS OWNED OR CONTROLLED BY OWNED ANALOG DEVICES.

SCHEMATIC

HW TYPE : EVAL Board
Product(s): ADE7933

DESIGN VIEW	DRAWING NO.	REV
<DESIGN_VIEW>	02-034694	G

PTD ENGINEER	SIZE	SCALE	SHEET 7 OF 7
D SMITH	D	1:1	