Evaluating the AD5141 Digital Potentiometer

FEATURES

- Full featured evaluation board for the AD5141 in conjunction with low voltage digital potentiometer (digiPOT) motherboard (EVAL-MB-LV-ARDZ)
- Various test circuits
- Various power solutions
- Various AC/DC input signals
- PC control in conjunction with the Analog Devices, Inc., EVAL-SDP-CK1Z (SDP-K1) controller board

EVALUATION KIT CONTENTS

- EVAL-AD5141-2DBZ: the AD5141 daughter board

HARDWARE REQUIRED

- EVAL-MB-LV-ARDZ digiPOT motherboard (purchased separately)
- EVAL-SDP-CK1Z (SDP-K1) controller board (purchased separately)
- PC running on Windows® 10 (32-bit or 64-bit) or later

SOFTWARE REQUIRED

- Analysis | Control | Evaluation (ACE) software, which is also available for download from the EVAL-AD5141-2DBZ product page

GENERAL DESCRIPTION

This user guide describes the evaluation board for evaluating the AD5141—a digital potentiometer with 256 positions and nonvolative memory. With versatile programmability, the AD5141 allows multiple modes of operation, including read/write access in the RDAC and EEPROM registers, increment/decrement of resistance, resistance changes in ±6 dB scales, wiper setting readback, and extra electronically erasable programmable read-only memory (EEPROM) for storing user-defined information, such as memory data for other components or a lookup table.

The AD5141 supports a dual supply (±2.25V to ±2.75V) operation and a single supply (+2.3V to +5.5V) operation, making the device suitable for battery-powered applications and many other applications. The EVAL-MB-LV-ARDZ incorporates an internal power supply from the USB and provides on-board +5V, +3V, +2.5V/−2.5V supplies to the EVAL-AD5141-2DBZ.

The EVAL-MB-LV-ARDZ interfaces with the USB port of a PC via the system demonstration platform (SDP-K1) controller board. The ACE software is available for download on the EVAL-AD5141-2DBZ product page. This software enables the user to program the AD5141. A peripheral module interface (PMOD) connection is also available that allows the connection of different microcontrollers to the EVAL-MB-LV-ARDZ without the SDP-K1 controller board. Note that when a microcontroller is used through the PMOD connection, the SDP-K1 board must be disconnected, and the user cannot use the ACE software.

Complete specifications for the AD5141 part can be found in the AD5141 data sheet, which is available from Analog Devices, and must be consulted in conjunction with this user guide when using the evaluation board.

TYPICAL EVALUATION SETUP

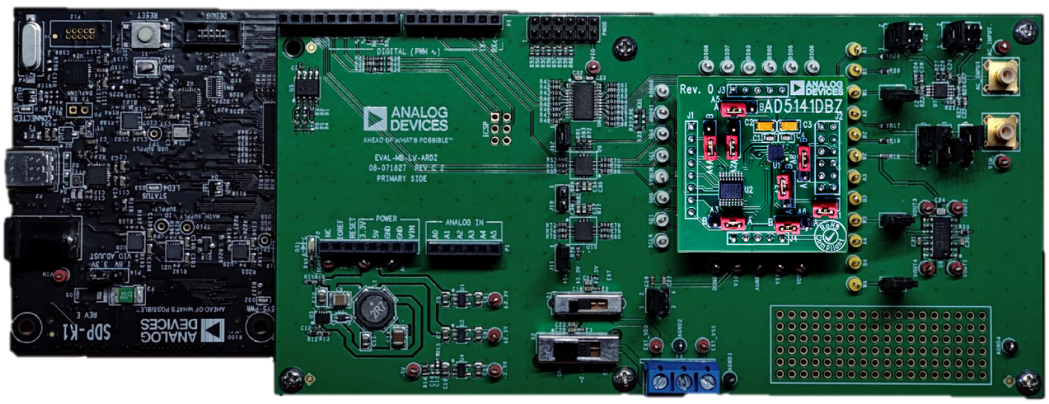

Figure 1. Digital Picture of Evaluation Board with Low Voltage DigiPOT Motherboard and System Demonstration Platform

TABLE OF CONTENTS

Features..... 1
Evaluation Kit Contents..... 1
Hardware Required..... 1
Software Required.....1
General Description.....1
Typical Evaluation Setup..... 1
Evaluation Board Software.....3
Installing ACE.....3
Loading SDP-K1 Firmware.....3
Installing the EVAL-AD5141-2DBZ Plugin.....3
Initial Setup.....3
Evaluation Board Hardware.....5
Power Supplies..... 5
Link Options..... 5
Test Circuits.....6
Evaluation Board Schematics and Artwork..... 8
EVAL-MB-LV-ARDZ (Motherboard).....8
EVAL-AD5141-2DBZ (Daughter Board)..... 13
Ordering Information.....15
Bill of Materials.....15

REVISION HISTORY

5/2025—Revision 0: Initial Version

EVALUATION BOARD SOFTWARE

INSTALLING ACE

The EVAL-AD5141-2DBZ uses the ACE evaluation software that allows the evaluation and control of multiple evaluation systems.

The ACE installer comes with the necessary SDP-K1 drivers and the Microsoft® .NET Framework 4 by default. The ACE software is available for download from the ACE software page and must be installed before connecting the SDP-K1 board to the USB port of the PC to ensure that the SDP-K1 board is recognized as soon as it is connected to the PC. For full instructions on how to install and use this software, see the ACE software page on the Analog Devices website.

LOADING SDP-K1 FIRMWARE

A dedicated firmware to control the EVAL-AD5141-2DBZ is required to be loaded to the SDP-K1. Right click the .bin file and send to the drive name **SDP-K1**, see Figure 2. A dialog box pops up showing the progress which takes a few seconds. The dialog box automatically disappears once the firmware is loaded.

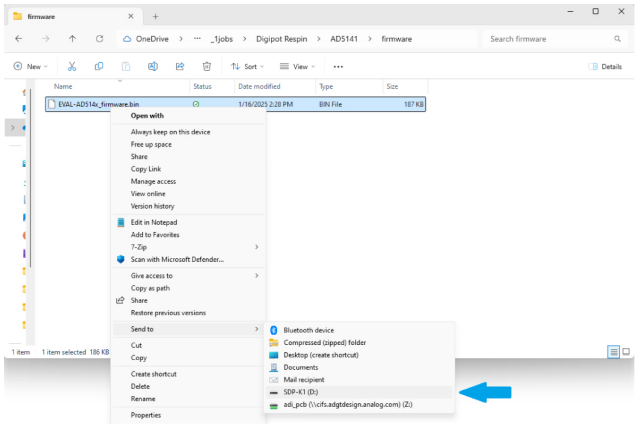

Figure 2. Loading SDP-K1 Firmware

INSTALLING THE EVAL-AD5141-2DBZ PLUGIN

A plugin for the EVAL-AD5141-2DBZ is required to be installed on ACE to communicate with the firmware loaded on SDP-K1. To install the plugin, take the following steps:

1. Connect the evaluation board to the SDP-K1 board, and connect the USB cable between the SDP-K1 board and the PC.
2. Open ACE, go to **Plug-in Manager**. A dialog box occasionally pops up asking to reprogram the SDP-K1 with a standard firmware, always select **No** or **Cancel** as shown in Figure 3.

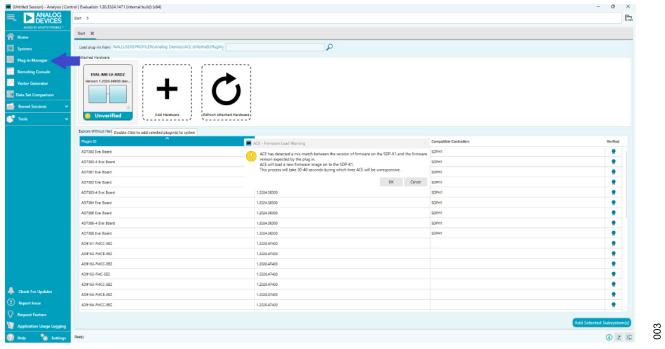

Figure 3. Opening Plug-in Manager

3. Within **Plug-in Manager**, go to **Available Packages** and search for **Board.ADDigipots**. Select the available plugin and click **Install Selected**, see Figure 4.

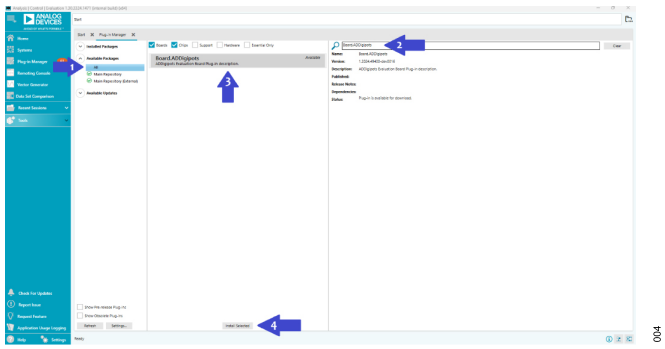

Figure 4. Installing Board.ADDigipots Plugin

INITIAL SETUP

To set up the evaluation board, take the following steps:

1. Connect the evaluation board to the SDP-K1 board, and connect the USB cable between the SDP-K1 board and the PC.
2. Load the SDP-K1 firmware.
3. Run the ACE application. The **EVAL-MB-LV-ARDZ** plugin appears in the **Attached Hardware** section of the **Start** tab.

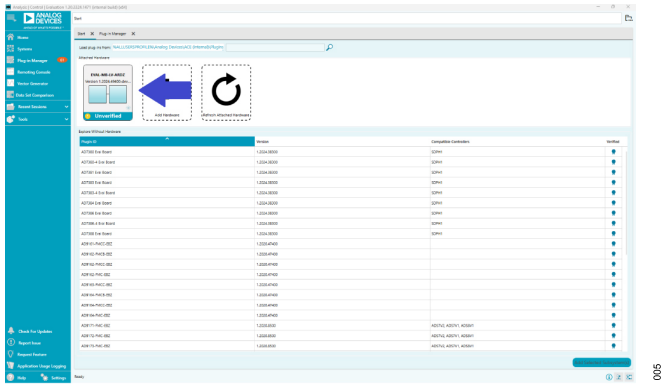

Figure 5. EVAL-MB-LV-ARDZ as Attached Hardware

4. Double click the board plugin to open the board view. If the correct firmware in the SDP-K1 controller is missing or does not

EVALUATION BOARD SOFTWARE

match, a dialog box pops up and gives the option to flash the correct firmware. Click **Cancel** if the firmware is already loaded.

5. In the **Device system_config Attributes** section, set the following information:
   a. **device_generic: AD5141**
   b. **comm_interface: SPI**
   c. **operating_mode: potentiometer**

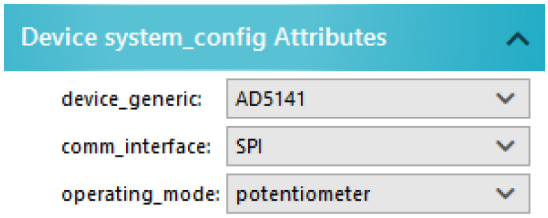

006

Figure 6. Device System_Config Attributes

6. Click **Reconfigure System** at the bottom of the system config window. The **System Config Summary** shows up, then click **Modify**.

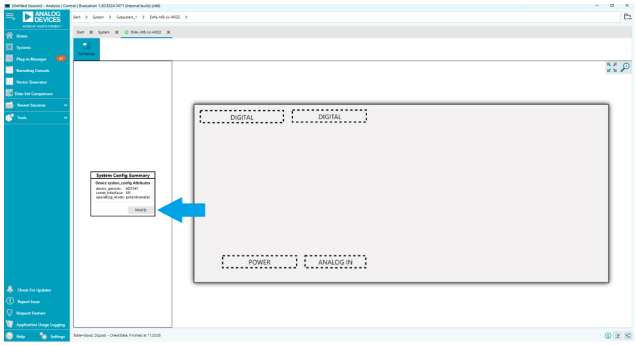

007

Figure 7. EVAL-MB-LV-ARDZ Board View Configuration Window

7. Restart the ACE software and repeat Step 4. Double click the **Digipot** block shown in the board view.

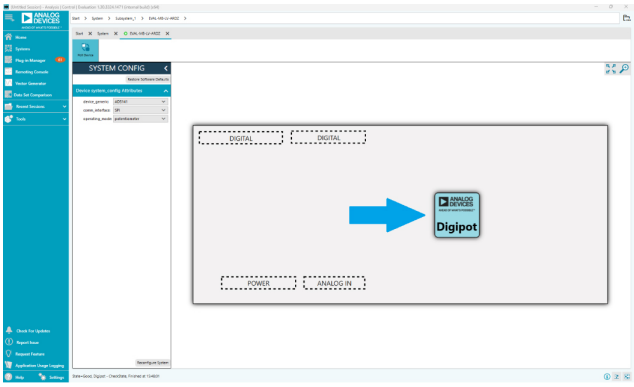

008

Figure 8. EVAL-MB-LV-ARDZ Board View to Chip View

8. Change the values you want to modify and press the enter key to send them to the device.

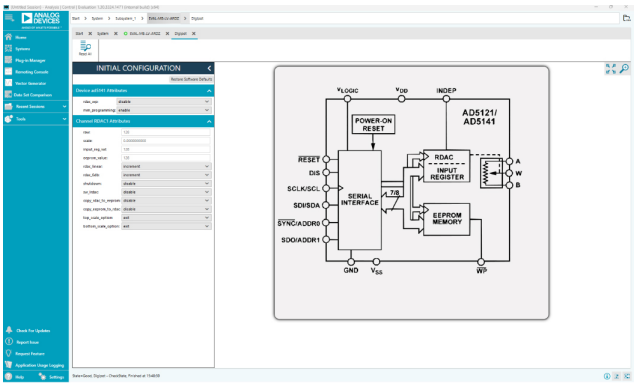

009

Figure 9. Chip View

For more information about the ACE functionality for the AD5141, refer to the markdown documentation in the ACE software.

EVALUATION BOARD HARDWARE

POWER SUPPLIES

The EVAL-MB-LV-ARDZ motherboard provides both on-board single (+5V, +3.3V) and dual (+2.5V/−2.5V) power supplies. Users can choose between voltages using S1 and S2. The output of S1 is connected to V_{DD} while S2 is connected to V_{SS}. For safety precaution, use the switch only if there is no power connected to the motherboard. V_{LOGIC} is connected to V_{DD} via J9 jumper pins by default. For the switch options, see Table 1.

The EVAL-AD5141-2DBZ can also be powered externally through the P6 connectors if a different voltage supply is needed or if the PMOD connector is used, as described in Table 2. Remove the shunt connection of J9 if external supply is used.

All supplies are decoupled to ground using 10µF and 0.1µF capacitors.

Table 1. On-Board Power Supply Switch Options

Switch	Position	Option
S1	1	5V
	2	3.3V (default)
	3	2.5V
	4	EXT_VDD
S2	1	GND (default)
	2	−2.5V
	3	EXT_VSS

Table 2. External Power Supply Connectors

Connector Label	Voltage
EXT_VDD	External analog positive power supply. Recommended supply is +15 V.
GND	Ground.
EXT_VSS	External analog negative power supply. Recommended supply is −15 V.

LINK OPTIONS

Several link and switch options are incorporated in the EVAL-MB-LV-ARDZ motherboard and the EVAL-AD5141-2DBZ daughter board, and must be set up before using the board. The default positions of the links are configured to control the evaluation board via the SDP-K1 board using a PC. The functions of these link options are described in Table 3.

The EVAL-AD5141-2DBZ has many on-board configuration options. One option is the ability to switch between I²C and SPI as its communication interface via the A2 link. For more information, see Table 4.

Table 3. Motherboard Link Functions

Link No.	Option
J9	This link selects the V_{LOGIC} connection Position 1–2 connects V_{LOGIC} to V_{DD} (default) Position 3–4 connects V_{LOGIC} to IO_{REF} pin from SDP-K1
J10	Enables the step down translator for open drain lines Must be disconnected if V_{DD} is greater than 3.3V (default) Must be connected if V_{DD} is less than 3.3V
J11	Enables the step up translator for open drain lines Must be connected if V_{DD} is greater than 3.3V (default) Must be disconnected if V_{DD} is less than 3.3V
J12	Enables the translator for push-pull lines. Must be connected when using SDP-K1 (default) Must be disconnected when using PMOD

Table 4. Daughter Board Link Functions

Link No.	Option	Description
A1	IN (default)	Closes feedback loop of second operational amplifier in the AD8618
A2	A (default) B	DIS = GND (SPI) DIS = V_{LOGIC} (I²C)
A3	A | B	See Table 5
A4	A | B	See Table 5
A5	A (default) B	INDEP = DGND (potentiometer mode) INDEP = V_{LOGIC} (linear gain setting mode)
A6	B (default)	Connects Terminal A to Terminal A1
A7	B (default)	Connects Terminal W to Terminal W1
A8	B (default)	Connects Terminal B to Terminal B1

Table 5. I²C Address Selection Table

A3 Jumper Position	A4 Jumper Position	Device Address
A	A	0101111 (default)
A	B	0100011
B	A	0101100
B	B	0100000

EVALUATION BOARD HARDWARE

TEST CIRCUITS

The EVAL-MB-LV-ARDZ incorporates several test circuits in the output to evaluate the performance of the AD5141 in typical applications.

DAC

The digiPOT can be operated as a digital-to-analog converter (DAC), as shown in Figure 10. Table 6 describes the options available for the voltage references. This test circuitry is connected to Channel 1.

The output voltage is defined in Equation 1.

$$V_{OUT} = \left(V_A - V_B\right) \times \frac{RDAC1}{256} \quad (1)$$

where:

RDAC1 is the code loaded in the RDAC1 register.

V_A is the voltage applied to Terminal A via J1.

V_B is the voltage applied to Terminal B via J2.

However, by changing the R28 and R29 external resistor values, the user can reduce the voltage of the voltage references. In this case, use the A1 and B1 test points to measure the voltage applied to Terminal A and Terminal B, and to recalculate V_A and V_B in Equation 1.

Table 6. DAC Voltage References

Terminal	Link	Position	Description
A1	J1	1 and 2	Connects Terminal A1 to V_{DD}
		3 and 4	Connects Terminal A1 to $V_{DD}/2$. Do not apply AC signal.
W1	J3		Connects Terminal W1 to an output buffer
B1	J2	1 and 2	Connects Terminal B1 to $V_{DD}/2$
		3 and 4	Connects Terminal B1 to V_{SS}
		5 and 6	Connects Terminal B1 to analog ground

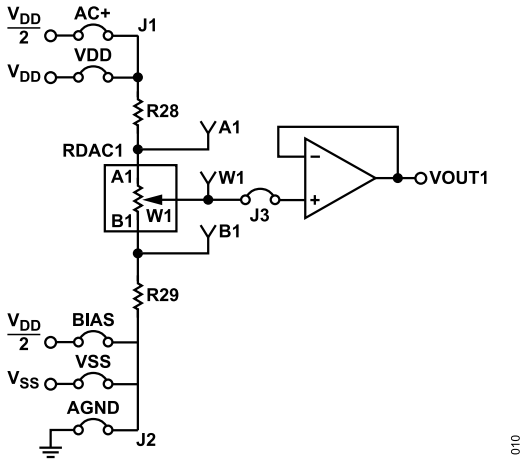

Figure 10. DAC

EVALUATION BOARD HARDWARE

AC Signal Attenuation

The RDAC can be used to attenuate an AC signal, which must be provided externally using the AC_INPUT connector, as shown in Figure 11.

Depending on the voltage supply rails and the DC offset voltage of the AC signal, various configurations can be used as described in Table 7.

The signal attenuation is defined in Equation 2.

$$Attenuation\ (\mathrm{dB}) = 20 \times \log\left(\frac{R_{WB1} + R_W}{R_{AB}}\right) \quad (2)$$

where:
R_W is the wiper resistance.
R_{AB} is the end-to-end resistance value.
R_{WB1} is the resistor between Terminal W1 and Terminal B1.

Table 7. AC Signal Attenuation Link Options

Voltage Supply	Maximum AC Signal Amplitude	Link	Position	Conditions
Single	V_{DD}	J1	3 and 4 (AC + BIAS)	No DC offset voltage; the AC signal is outside the voltage supply rails due to the DC offset voltage; or the DC offset voltage ≠ $V_{DD}/2$.[1]
			5 and 6 (AC_INPUT)	All other conditions.
		J2	3 and 4 (BIAS)	Use in conjunction with the AC + BIAS link.
			1 and 2 (AGND)	All other conditions.
Dual	V_{DD}/V_{SS}	J1	3 and 4 (AC + BIAS)	The AC signal is outside the voltage supply rails due to the DC offset voltage; the DC offset voltage ≠ 0 V_{DD}.[1]
			5 and 6 (AC_INPUT)	All other conditions.
		J2	1 and 2 (AGND)	Use in conjunction with the AC + BIAS link.
			5 and 6 (V_{SS})	All other conditions.

[1] Recommended to ensure optimal total harmonic distortion (THD) performance.

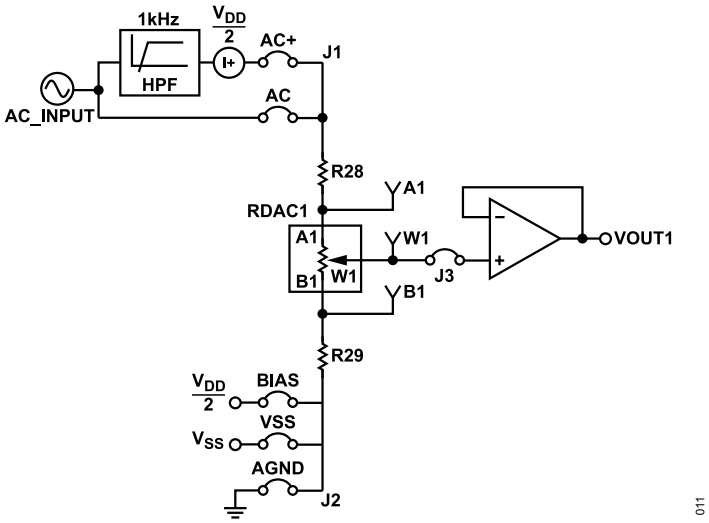

Figure 11. AC Signal Attenuator

EVALUATION BOARD SCHEMATICS AND ARTWORK

EVAL-MB-LV-ARDZ (MOTHERBOARD)

ARDUINO UNO SHIELD (REV B)

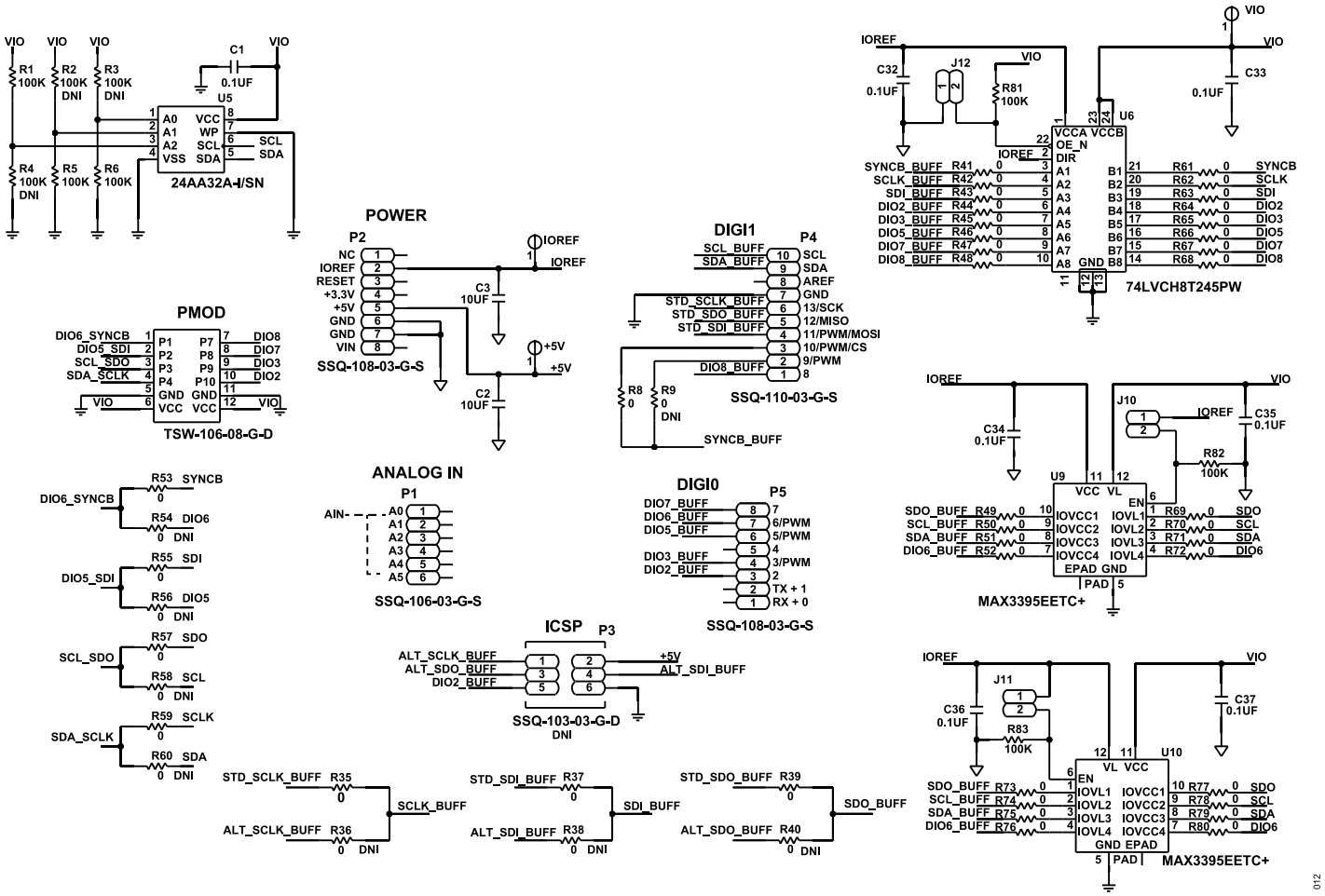

Figure 12. EVAL-MB-LV-ARDZ Schematic, SDP, Arduino-Compatible, PMOD Connectors, and Translators

EVALUATION BOARD SCHEMATICS AND ARTWORK

POWER CIRCUITRY

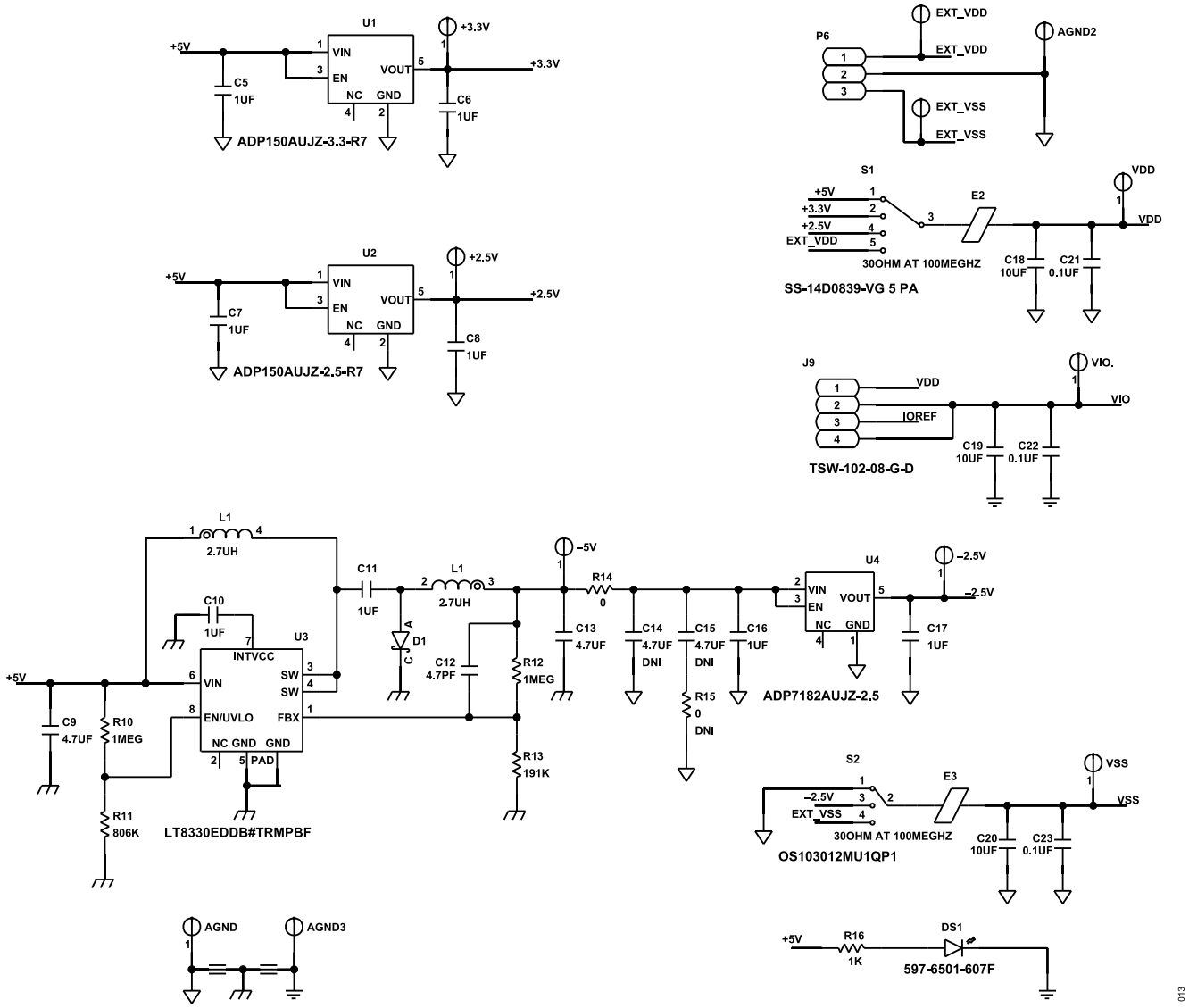

Figure 13. EVAL-MB-LV-ARDZ Schematic, Power Circuitry

EVALUATION BOARD SCHEMATICS AND ARTWORK

CONNECTORS AND OUTPUT CIRCUITRY

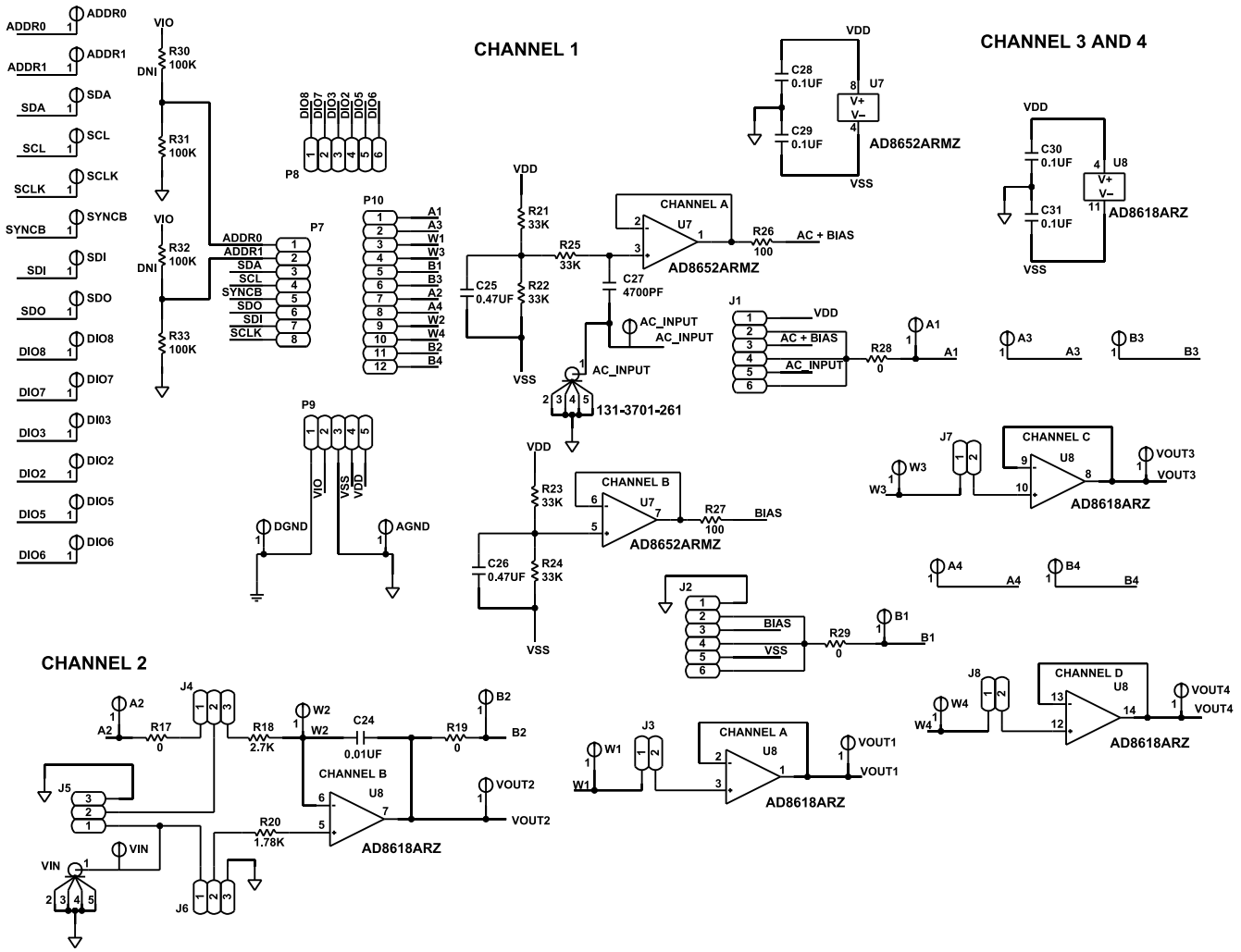

Figure 14. EVAL-MB-LV-ARDZ Schematic, Daughter Board Connectors, Test Points, and Output Circuitry

EVALUATION BOARD SCHEMATICS AND ARTWORK

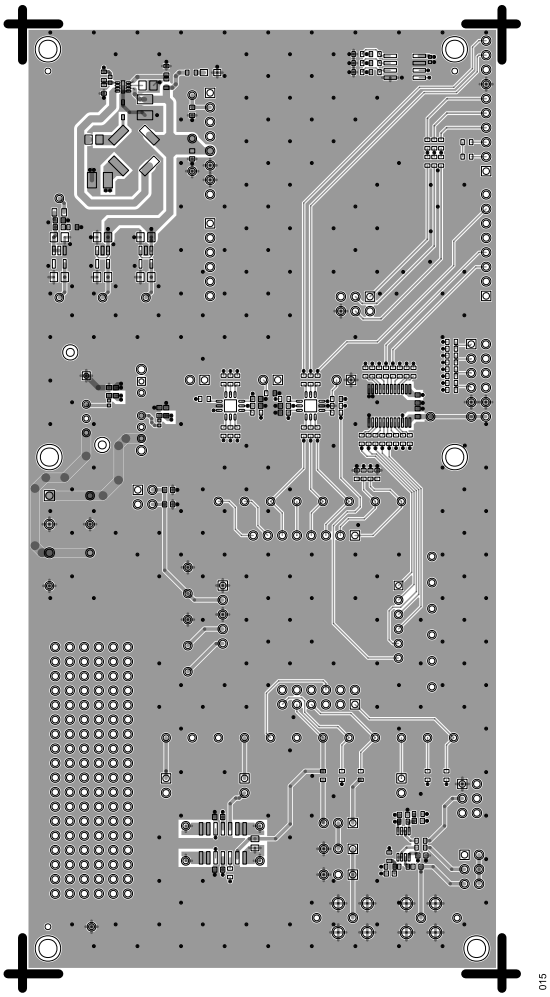

Figure 15. EVAL-MB-LV-ARDZ Board Layout L1 Primary

EVALUATION BOARD SCHEMATICS AND ARTWORK

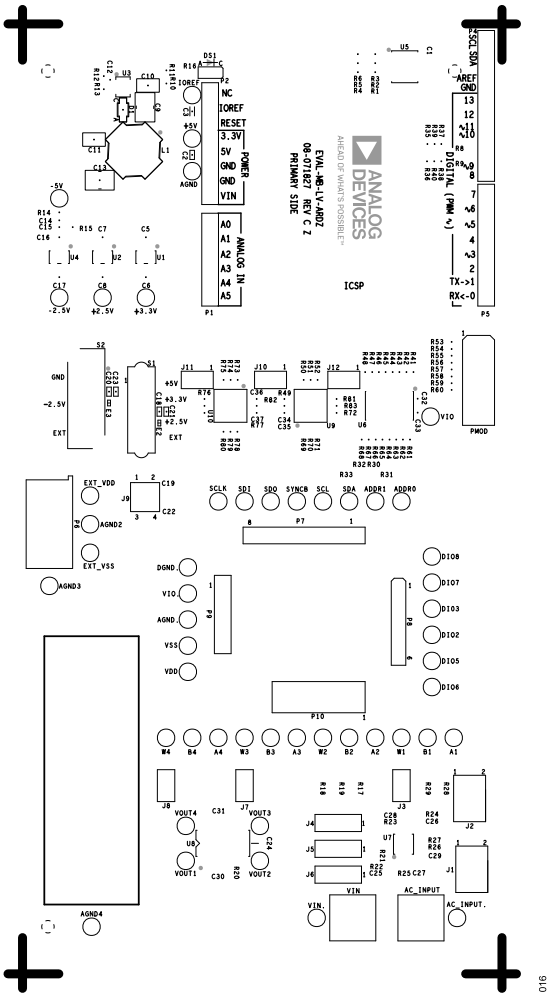

Figure 16. EVAL-MB-LV-ARDZ Board Layout Solder Mask Primary

EVALUATION BOARD SCHEMATICS AND ARTWORK

EVAL-AD5141-2DBZ (DAUGHTER BOARD)

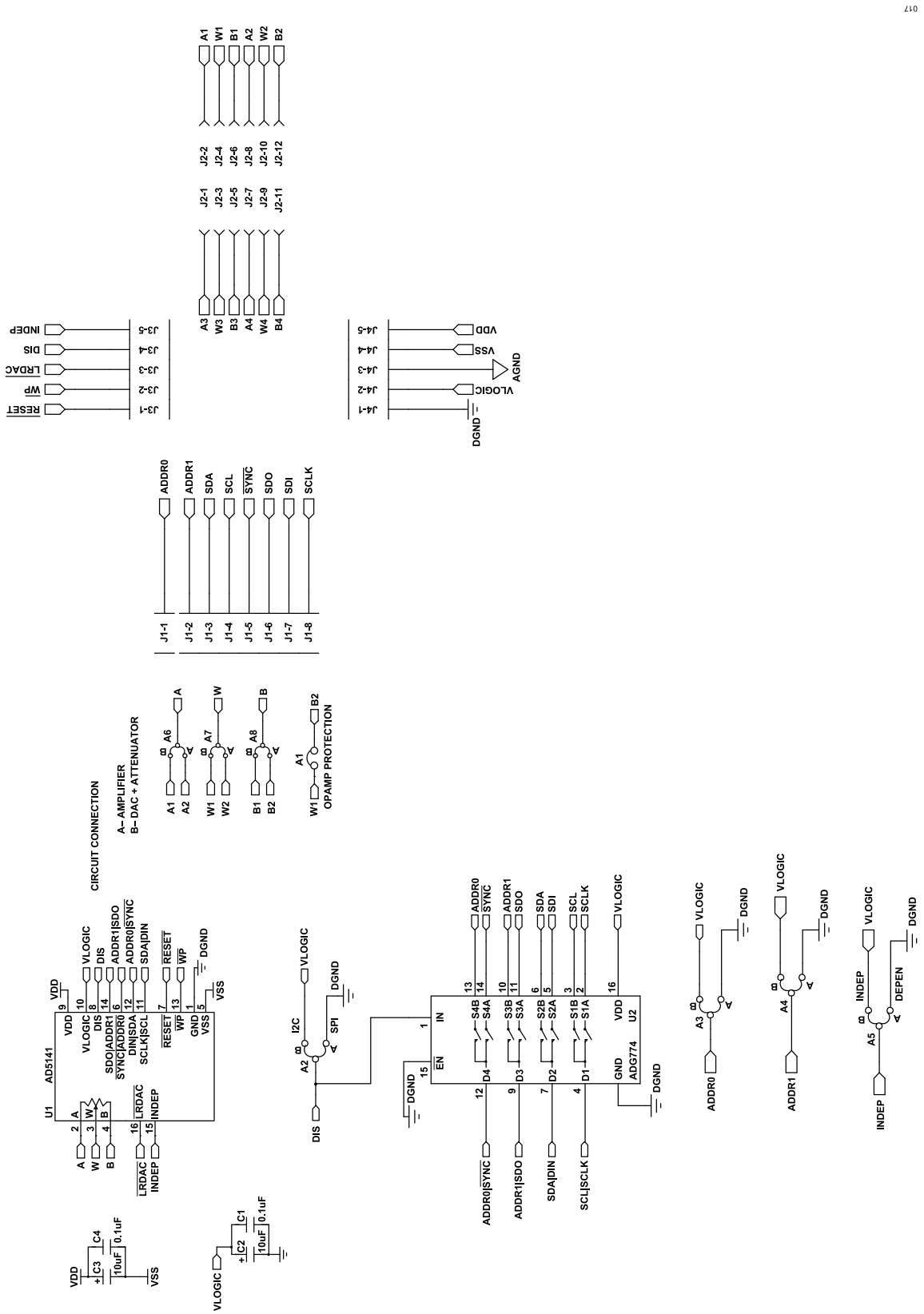

Figure 17. Schematic of EVAL-AD5141-2DBZ

EVALUATION BOARD SCHEMATICS AND ARTWORK

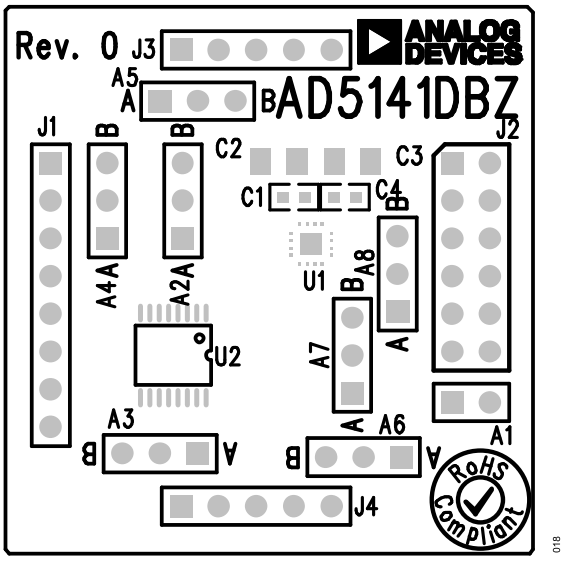

Figure 18. Component Side View of EVAL-AD5141-2DBZ

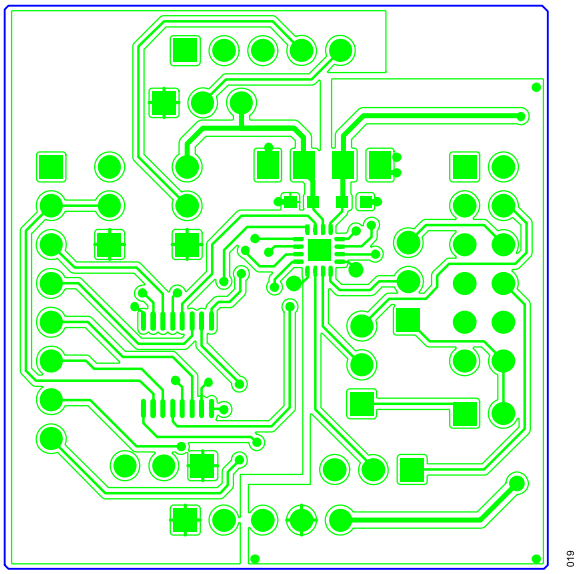

Figure 19. Component Placement Drawing of EVAL-AD5141-2DBZ

ORDERING INFORMATION

BILL OF MATERIALS

Table 8. Motherboard

Qty	Reference Designator	Description	Sourcing
18	+2.5V, +3.3V, +5V, −2.5V, −5V, AC_INPUT, EXT_VDD, EXT_VSS, IOREF, VDD, VIN, VIO, VIO, VOUT1, VOUT2, VOUT3, VOUT4, VSS	Connector-PCB test point red	Generic
12	A1, A2, A3, A4, B1, B2, B3, B4, W1, W2, W3, W4	Connector-PCB test point yellow	Generic
2	AC_INPUT, VIN	Connector-PCB coax surface-mount device jack RF vertical (Pin Center Male Connector - gold)	Generic
14	ADDR0, ADDR1, DI03, DIO2, DIO5, DIO6, DIO7, DIO8, SCL, SCLK, SDA, SDI, SDO, SYNCB	Connector-PCB test point white	Generic
6	AGND, AGND, AGND2, AGND3, AGND4, DGND	Connector-PCB test point black	Generic
1	C1	Ceramic capacitor 0.1µF 16V 10% X7R 0402 AEC-Q200	Generic
8	C5, C6, C7, C8, C10, C11, C16, C17	Ceramic capacitor 1µF 50V 10% X7R 0805 AEC-Q200	Generic
1	C12	Silicon capacitor 4.7pF 25V 0.1pF 0402 AEC-Q200	Generic
2	C9, C13	Ceramic capacitor 4.7µF 50V 10% X7R 1210 AEC-Q200	Generic
5	C2, C3, C18, C19, C20	Ceramic capacitor 10µF 16V 10% X5R 0603	Generic
9	C21, C22, C23, C32, C33, C34, C35, C36, C37	Ceramic capacitor 0.1µF 50V 10% X7R 0603	Generic
1	C24	Ceramic capacitor 0.01µF 50V 5% C0G 0805	Generic
2	C25, C26	Ceramic capacitor 0.47µF 25V 10% X7R 0603	Generic
1	C27	Ceramic capacitor 4700pF 50V 10% X7R 0603	Generic
4	C28, C29, C30, C31	Ceramic capacitor 0.1µF 16V 10% X7R 0603	Generic
1	D1	Dio Schottky barrier rectifier, 1A	Generic
1	DS1	LED 570nm SMD (green)	Generic
2	E2, E3	Inductor-chip ferrite bead	Generic
2	J1, J2	Connector-PCB 6 position male HDR unshrouded 0.635mm square post double row 5.84mm mating post, 2.54mm solder tail, 2.54mm pitch	Generic
6	J3, J7, J8, J10, J11, J12	Connector-PCB HDR two pin dual straight tip	Generic
3	J4, J5, J6	Connector-PCB 3 position male HDR unshrouded 0.635mm square post single row 5.84mm mating post, 2.54mm solder tail, 2.54mm pitch	Generic
1	J9	Connector-PCB header four pin straight tip	Generic
1	L1	Inductor-power shielded wirewound 2.7µH 30% 100kHz 1.85A 0.0805Ω DCR	Generic
1	P1	Connector-PCB receptacle 25mil square post 2.54mm pitch	Generic
1	P10	Connector-PCB receptacle 12 position dual row	Generic
2	P2, P5	Connector-PCB receptacle 25mil square post 2.54mm pitch	Generic
1	P4	Connector-PCB receptacle 25mil square post 2.54mm pitch	Generic
1	P6	Connector 5mm pitch, terminal block (RA 16-22AWG) 3 position	Generic
1	P7	Connector-PCB receptacle 0.1mm 8 position single gold	Generic
1	P8	Connector-PCB Berg HDR ST female six pin	Generic
1	P9	Connector-PCB receptacle 25mil square post 2.54mm pitch	Generic
1	PMOD	Connector-PCB HDR ST male - PMOD	Generic
8	R1, R5, R6, R31, R33, R81, R82, R83	Resistor SMD 100kΩ 1% 1/16W 0603	Generic
2	R10, R12	Resistor surface-mount device (SMD) 1MΩ 1% 1/4W 0603 AEC-Q200	Generic
1	R11	Resistor SMD 806kΩ 1% 1/10W 0603 AEC-Q200	Generic

ORDERING INFORMATION

Table 8. Motherboard (Continued)

Qty	Reference Designator	Description	Sourcing
1	R13	Resistor SMD 191kΩ 1% 1/10W 0603 AEC-Q200	Generic
1	R14	Resistor SMD 0Ω 1/10W 0805	Generic
1	R16	Resistor SMD 1kΩ 1% 1/10W 0603 AEC-Q200	Generic
4	R17, R19, R28, R29	Resistor SMD 0Ω jumper 1/3W 0603 AEC-Q200	Generic
1	R18	Resistor SMD 2.7kΩ 0.1% 1/10W 0603 AEC-Q200	Generic
1	R20	Resistor SMD 1.78kΩ 1% 1/10W 0603 AEC-Q200	Generic
5	R21, R22, R23, R24, R25	Resistor SMD 33kΩ 1% 1/10W 0603	Generic
2	R26,R27	Resistor SMD 100Ω 1% 1/10W 0603 AEC-Q200	Generic
39	R35, R37, R39, R41, R42, R43, R44, R45, R46, R47, R48, R49, R50, R51, R52, R53, R55, R57, R59, R61, R62, R63, R64, R65, R66, R67, R68, R69, R70, R71, R72, R73, R74, R75, R76, R77, R78, R79, R80	Resistor SMD 0Ω jumper 1/10W 0603 AEC-Q200	Generic
1	R8	Resistor 0Ω jumper 1/10W 0603	Generic
1	S1	Switch top slide 4P4T, 0.3A	Generic
1	S2	Switch slide SP3T	Generic
1	U1	IC-Analog Devices ultralow noise, CMOS linear regulator LDO 3.3VOUT	ADP150AUJZ-3.3-R7
2	U9, U10	IC-Analog Devices voltage level translator 4-channel bidirectional	MAX3395EETC+
1	U2	IC-Analog Devices CMOS linear regulator LDO 2.5V	ADP150AUJZ-2.5-R7
1	U3	IC-Analog Devices low IQ boost/sepic/inverting converter with 1A, 60V switch	LT8330EDDB#TRMPBF
1	U4	IC-Analog Devices low noise, linear regulator	ADP7182AUJZ-2.5-R7
1	U5	IC 32kbit serial EEPROM	24AA32A-I/SN
1	U6	IC-TTL 8-bit dual supply transceiver	74LVCH8T245PW
1	U7	IC-Analog Devices low distortion and noise CMOS operational amplifier	AD8652ARMZ
1	U8	IC-Analog Devices quadruple precision CMOS rail-to-rail in/out operational amplifier	AD8618ARZ

Table 9. Daughter Board

Qty	Reference Designator	Description	Sourcing
1	A1	2 pin (0.1 inch pitch) header and shorting shunt	Generic
5	A2, A3, A4, A5, A6, A7, A8	3 pin single in-line header and shorting link	Generic
2	C1, C4	0.1µF 50V ±10% X7R ceramic capacitor	Generic
2	C2, C3	10µF 6.3V ±20% tantalum capacitor (Case-A)	Generic
1	J1	SIP-8P header, 2.54mm, PCB, 1X8WAY	Generic
1	J2	12 pin (2x6) 0.1 inch pitch header	Generic
2	J3, J4	5 pin single in-line header	Generic
1	U1	AD5141 digital potentiometer	AD5141BCPZ10-RL7
1	U2	ADG774 low voltage quad SPDT switch	ADG774BRQZ

NOTES

ESD Caution

ESD (electrostatic discharge) sensitive device. Charged devices and circuit boards can discharge without detection. Although this product features patented or proprietary protection circuitry, damage may occur on devices subjected to high energy ESD. Therefore, proper ESD precautions should be taken to avoid performance degradation or loss of functionality.

Legal Terms and Conditions

By using the evaluation board discussed herein (together with any tools, components documentation or support materials, the “Evaluation Board”), you are agreeing to be bound by the terms and conditions set forth below (“Agreement”) unless you have purchased the Evaluation Board, in which case the Analog Devices Standard Terms and Conditions of Sale shall govern. Do not use the Evaluation Board until you have read and agreed to the Agreement. Your use of the Evaluation Board shall signify your acceptance of the Agreement. This Agreement is made by and between you (“Customer”) and Analog Devices, Inc. (“ADI”), with its principal place of business at Subject to the terms and conditions of the Agreement, ADI hereby grants to Customer a free, limited, personal, temporary, non-exclusive, non-sublicensable, non-transferable license to use the Evaluation Board FOR EVALUATION PURPOSES ONLY. Customer understands and agrees that the Evaluation Board is provided for the sole and exclusive purpose referenced above, and agrees not to use the Evaluation Board for any other purpose. Furthermore, the license granted is expressly made subject to the following additional limitations: Customer shall not (i) rent, lease, display, sell, transfer, assign, sublicense, or distribute the Evaluation Board; and (ii) permit any Third Party to access the Evaluation Board. As used herein, the term “Third Party” includes any entity other than ADI, Customer, their employees, affiliates and in-house consultants. The Evaluation Board is NOT sold to Customer; all rights not expressly granted herein, including ownership of the Evaluation Board, are reserved by ADI. CONFIDENTIALITY. This Agreement and the Evaluation Board shall all be considered the confidential and proprietary information of ADI. Customer may not disclose or transfer any portion of the Evaluation Board to any other party for any reason. Upon discontinuation of use of the Evaluation Board or termination of this Agreement, Customer agrees to promptly return the Evaluation Board to ADI. ADDITIONAL RESTRICTIONS. Customer may not disassemble, decompile or reverse engineer chips on the Evaluation Board. Customer shall inform ADI of any occurred damages or any modifications or alterations it makes to the Evaluation Board, including but not limited to soldering or any other activity that affects the material content of the Evaluation Board. Modifications to the Evaluation Board must comply with applicable law, including but not limited to the RoHS Directive. TERMINATION. ADI may terminate this Agreement at any time upon giving written notice to Customer. Customer agrees to return to ADI the Evaluation Board at that time. LIMITATION OF LIABILITY. THE EVALUATION BOARD PROVIDED HEREUNDER IS PROVIDED “AS IS” AND ADI MAKES NO WARRANTIES OR REPRESENTATIONS OF ANY KIND WITH RESPECT TO IT. ADI SPECIFICALLY DISCLAIMS ANY REPRESENTATIONS, ENDORSEMENTS, GUARANTEES, OR WARRANTIES, EXPRESS OR IMPLIED, RELATED TO THE EVALUATION BOARD INCLUDING, BUT NOT LIMITED TO, THE IMPLIED WARRANTY OF MERCHANTABILITY, TITLE, FITNESS FOR A PARTICULAR PURPOSE OR NONINFRINGEMENT OF INTELLECTUAL PROPERTY RIGHTS. IN NO EVENT WILL ADI AND ITS LICENSORS BE LIABLE FOR ANY INCIDENTAL, SPECIAL, INDIRECT, OR CONSEQUENTIAL DAMAGES RESULTING FROM CUSTOMER’S POSSESSION OR USE OF THE EVALUATION BOARD, INCLUDING BUT NOT LIMITED TO LOST PROFITS, DELAY COSTS, LABOR COSTS OR LOSS OF GOODWILL. ADI’S TOTAL LIABILITY FROM ANY AND ALL CAUSES SHALL BE LIMITED TO THE AMOUNT OF ONE HUNDRED US DOLLARS ($100.00). EXPORT. Customer agrees that it will not directly or indirectly export the Evaluation Board to another country, and that it will comply with all applicable United States federal laws and regulations relating to exports. GOVERNING LAW. This Agreement shall be governed by and construed in accordance with the substantive laws of the Commonwealth of Massachusetts (excluding conflict of law rules). Any legal action regarding this Agreement will be heard in the state or federal courts having jurisdiction in Suffolk County, Massachusetts, and Customer hereby submits to the personal jurisdiction and venue of such courts. The United Nations Convention on Contracts for the International Sale of Goods shall not apply to this Agreement and is expressly disclaimed. All Analog Devices products contained herein are subject to release and availability.

©2025 Analog Devices, Inc. All rights reserved. Trademarks and registered trademarks are the property of their respective owners.
One Analog Way, Wilmington, MA 01887-2356, U.S.A.