THIS DRAWING IS THE PROPERTY OF ANALOG DEVICES INC. IT IS NOT TO BE REPRODUCED OR COPIED, IN WHOLE OR IN PART, OR USED IN FURNISHING INFORMATION TO OTHERS, OR FOR ANY OTHER PURPOSE DETRIMENTAL TO THE INTERESTS OF ANALOG DEVICES.
THE EQUIPMENT SHOWN HEREON MAY BE PROTECTED BY PATENTS OWNED OR CONTROLLED BY ANALOG DEVICES.

RELAY CONTROL CHART

CONTROL	CODE	DEVICE	FUNCTION	CONNECTOR

JUMPER TABLE

JP#	ON	OFF
1		
2		
3		
4		
5		

* SEE ASSEMBLY INSTRUCTIONS

REVISIONS

REV	DESCRIPTION	DATE	APPROVED
A	INITIAL RELEASE	05NOV18	M. BANCISOR
B	AS PER ECR-085793	27MAR19	M. BANCISOR
C	AS PER ECR-088821	27JUN19	M. BANCISOR
D	AS PER ECR-094505	25MAY20	M. SUCIU

P.O SPEC.	BK/BD SPEC.	SOCKET OEM	OEM PART#	HANDLER

ROLE	NAME	DATE
TEMPLATE ENGINEER	N/A	
HARDWARE SERVICES	R. MACDONALD	05NOV18
HARDWARE SYSTEMS	N/A	
TEST ENGINEER	N/A	
COMPONENT ENGINEER	A.CAUILAN-AGENA	05NOV18
TEST PROCESS	N/A	
HARDWARE RELEASE	K.JABATAN	05NOV18
DESIGNER	G.GARCIA	05NOV18
PTD ENGINEER	M.BANCISOR	05NOV18
CHECKER	N/A	

SCHEMATIC

ANALOG DEVICES

HW TYPE : Customer Evaluation Z
Product(s): ADP3624
:
PACKAGE : N/A-lead N/A N/A-family
: Pitch-pitch StyleVendor Style
<User Define>
<User Define>
<User Define>

MASTER PROJECT TEMPLATE: TBD
TESTER TEMPLATE: no_template

UNLESS OTHERWISE SPECIFIED DIMENSIONS ARE IN INCHES

TOLERANCES

DECIMALS	FRACTIONS	ANGLES
X.XX +-0.010 X.XXX +-0.005	+-1/32	+-2

DRAWING NO. 02_051355

REV. D

SIZE D | SCALE 1:1 | CODE ID NO. CodeID | SHEET 1 OF 2

REVISIONS			
REV	DESCRIPTION	DATE	APPROVED

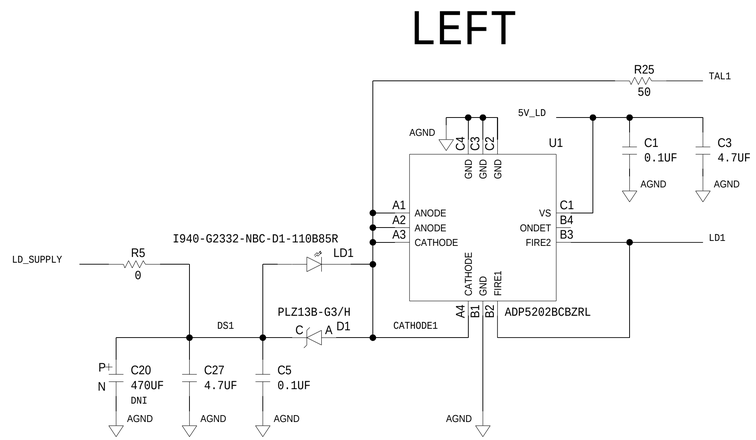

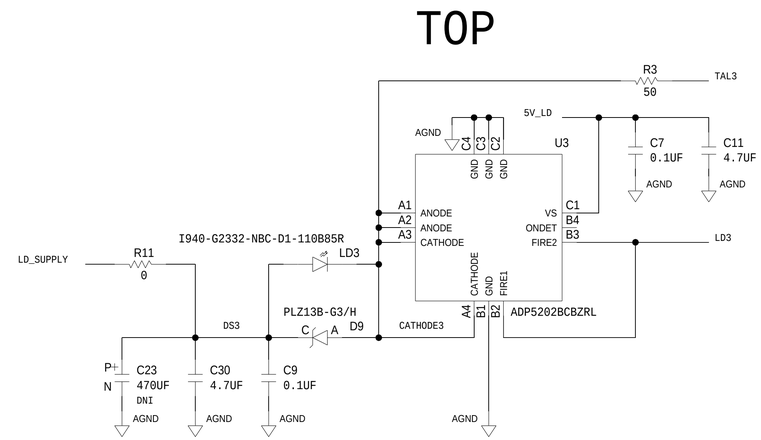

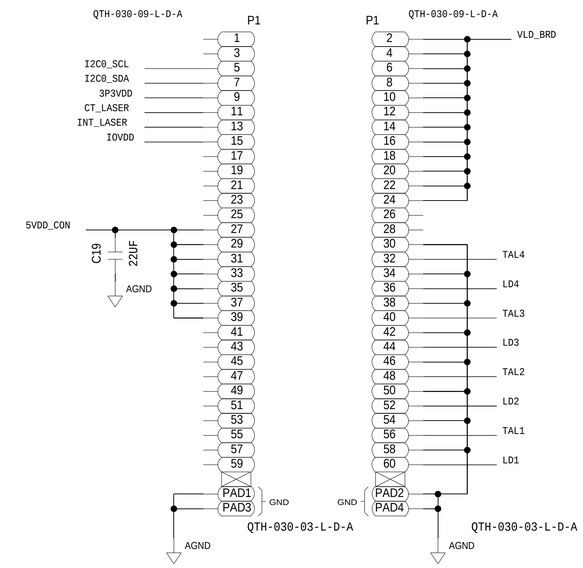

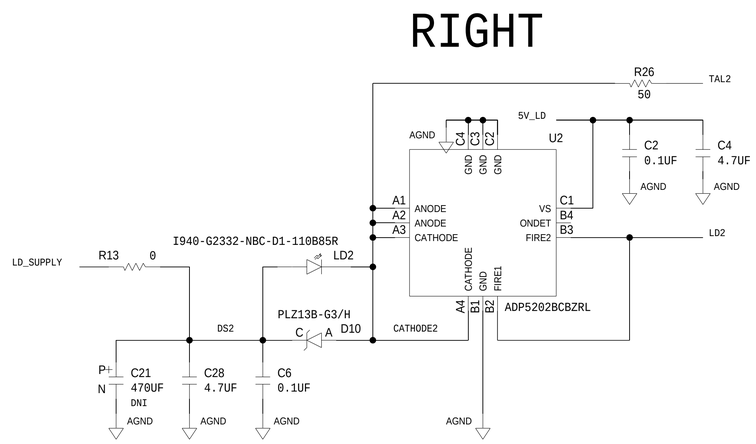

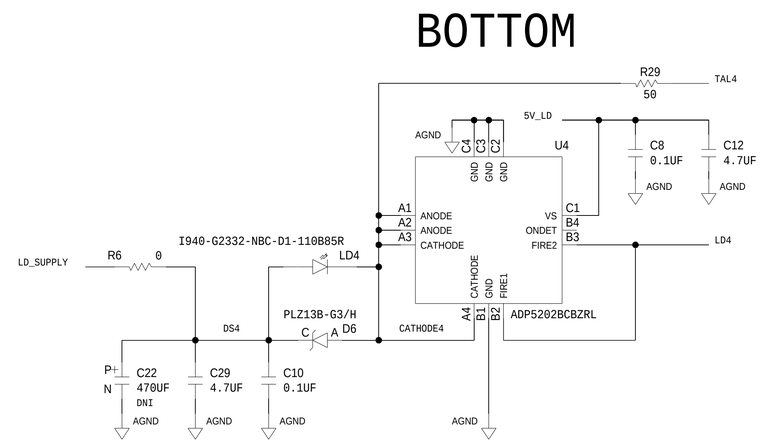

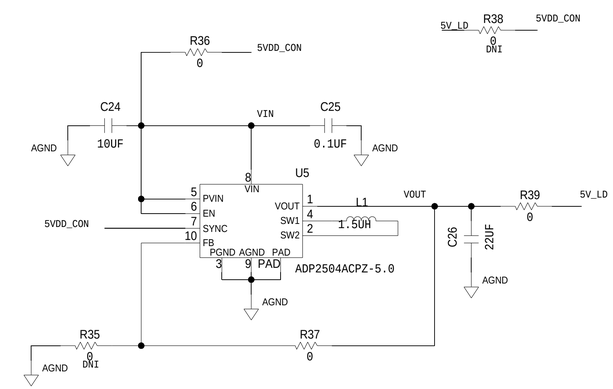

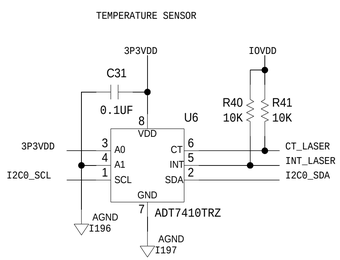

I2C ADDRESS 0X49

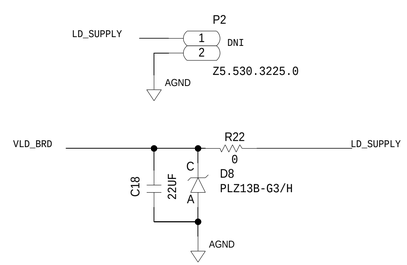

ANALOG DEVICES

THIS DRAWING IS THE PROPERTY OF ANALOG DEVICES INC.
IT IS NOT TO BE REPRODUCED OR COPIED, IN WHOLE OR
IN PART, OR USED IN FURNISHING INFORMATION TO OTHERS,
OR FOR ANY OTHER PURPOSE DETRIMENTAL TO THE INTERESTS
OF ANALOG DEVICES.
THE EQUIPMENT SHOWN HEREON MAY BE PROTECTED BY PATENTS
OWNED OR CONTROLLED BY OWNED ANALOG DEVICES.

SCHEMATIC

HW TYPE : Customer Evaluation Z
Product(s): ADP3624
:

DESIGN VIEW	DRAWING NO.	REV
<DESIGN_VIEW>	02_051355	D
PTD ENGINEER	SIZE / SCALE	SHEET 2 OF 2
M.BANCISOR	D / 1:1	