REVISIONS			
REV	DESCRIPTION	DATE	APPROVED
A	INITIAL RELEASE	05DEC22	X
B	ECR-118394	11DEC23	X

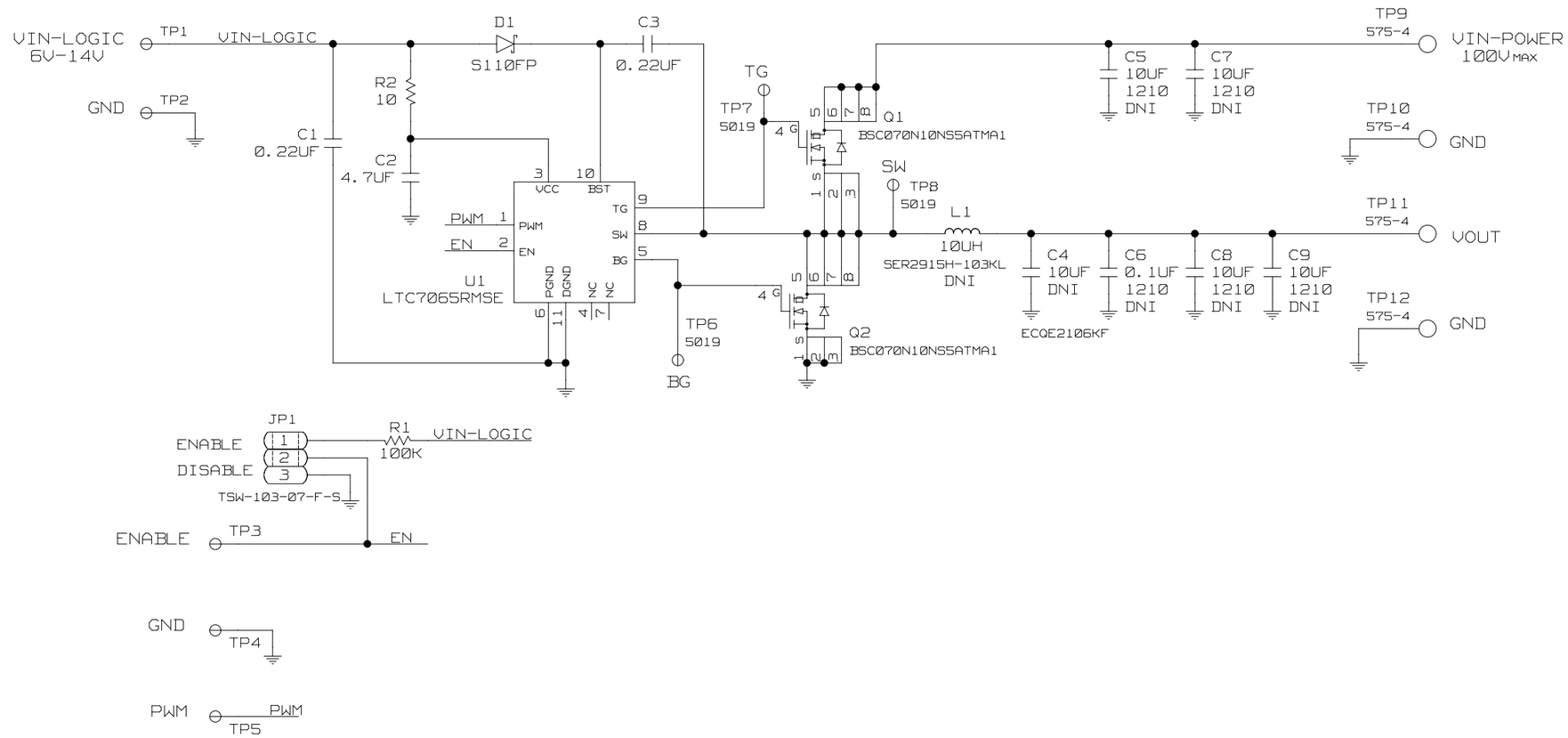

NOTES: UNLESS OTHERWISE SPECIFIED
ALL RESISTORS ARE 0603
ALL CAPACITORS ARE 0603

ANALOG DEVICES

THIS DRAWING IS THE PROPERTY OF ANALOG DEVICES INC. IT IS NOT TO BE REPRODUCED OR COPIED, IN WHOLE OR IN PART, OR USED IN FURNISHING INFORMATION TO OTHERS, OR FOR ANY OTHER PURPOSE DETRIMENTAL TO THE INTERESTS OF ANALOG DEVICES.
THE EQUIPMENT SHOWN HEREON MAY BE PROTECTED BY PATENTS OWNED OR CONTROLLED BY OWNED ANALOG DEVICES.

SCHEMATIC

HW TYPE : Customer Evaluation EVAL-LTC7065-AZ
Product(s): LTC7065
100V HALF-BRIDGE DRIVER WITH ADAPTIVE SHOOT-THROUGH PROTECTION

DESIGN VIEW	DRAWING NO.	REV
<DESIGN_VIEW>	02_073689	B

PTD ENGINEER	SIZE	SCALE	SHEET
-	C	1:1	SHEET 1 OF 1