RELAY CONTROL CHART

CONTROL	CODE	DEVICE	FUNCTION	CONNECTOR

REVISIONS			
REV	DESCRIPTION	DATE	APPROVED

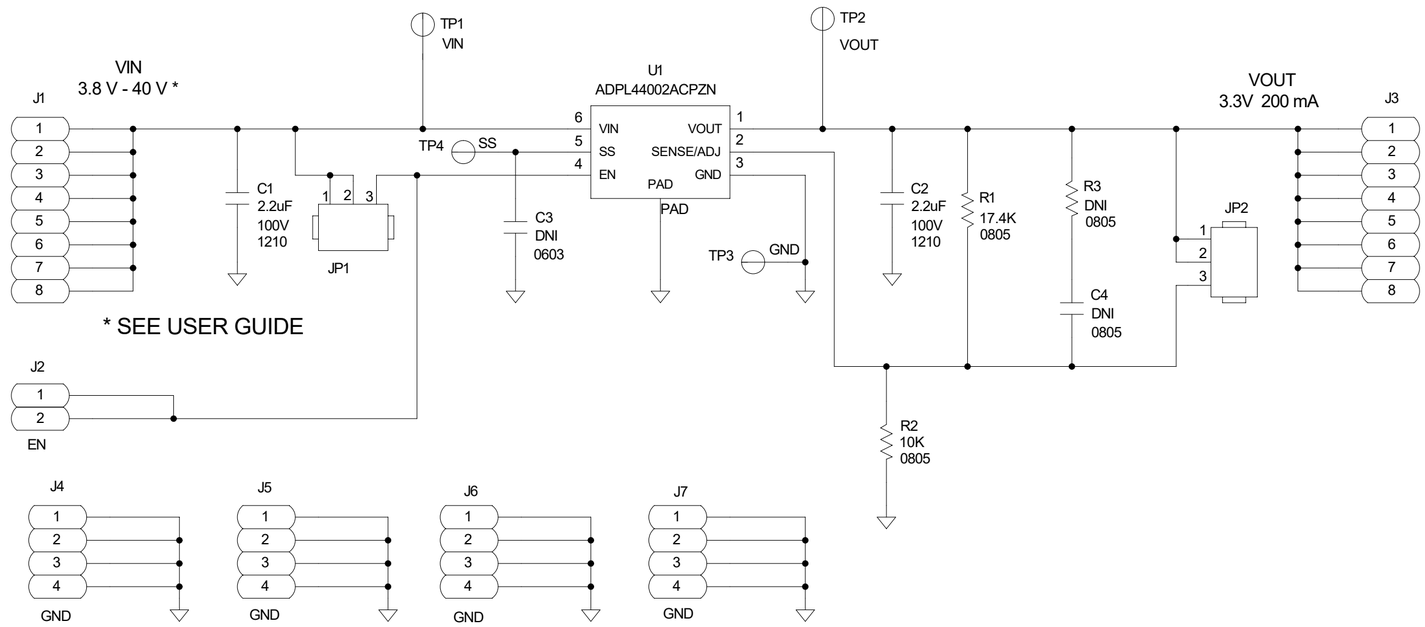

THIS DRAWING IS THE PROPERTY OF ANALOG DEVICES INC.
IT IS NOT TO BE REPRODUCED OR COPIED, IN WHOLE OR
IN PART, OR USED IN FURNISHING INFORMATION TO OTHERS,
OR FOR ANY OTHER PURPOSE DETRIMENTAL TO THE INTERESTS
OF ANALOG DEVICES.
THE EQUIPMENT SHOWN HEREON MAY BE PROTECTED BY PATENTS
OWNED OR CONTROLLED BY OWNED ANALOG DEVICES.

ANALOG DEVICES

SCHEMATIC

HW TYPE : Customer Evaluation
Product(s): ADPL44002
: N/A

DESIGN VIEW	DRAWING NO.	REV
$DESIGN_VIEW	02_082973	A

PTD ENGINEER	SIZE	SCALE	SHEET	OF
-	C	1:1	2	2