NOTE: UNLESS OTHERWISE SPECIFIED

1. ALL RESISTORS ARE IN OHMS, 0603.
   ALL CAPACITORS ARE IN MICROFARADS, 0603.
2. INSTALL SHUNTS AS SHOWN.

REVISION HISTORY				
ECO	REV	DESCRIPTION	APPROVED	DATE
—	1	PRODUCTION	ERIC B.	03-26-18

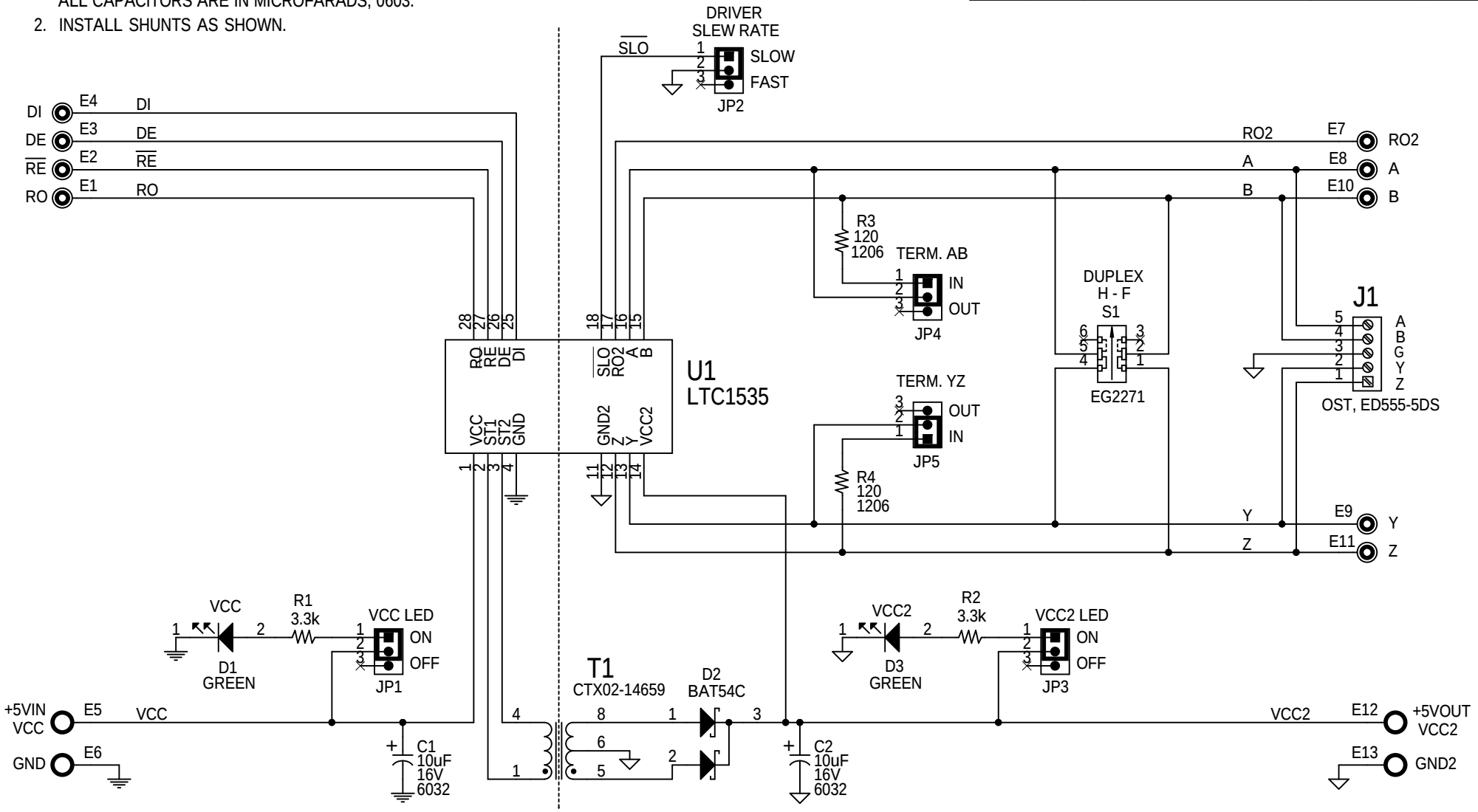

CUSTOMER NOTICE

ANALOG DEVICES HAS MADE A BEST EFFORT TO DESIGN A CIRCUIT THAT MEETS CUSTOMER - SUPPLIED SPECIFICATIONS; HOWEVER, IT REMAINS THE CUSTOMER'S RESPONSIBILITY TO VERIFY PROPER AND RELIABLE OPERATION IN THE ACTUAL APPLICATION. COMPONENT SUBSTITUTION AND PRINTED CIRCUIT BOARD LAYOUT MAY SIGNIFICANTLY AFFECT CIRCUIT PERFORMANCE OR RELIABILITY. CONTACT ANALOG DEVICES APPLICATIONS ENGINEERING FOR ASSISTANCE.

ADI CONFIDENTIAL - FOR CUSTOMER USE ONLY

THIS CIRCUIT IS PROPRIETARY TO ANALOG DEVICES AND SUPPLIED FOR USE WITH ANALOG DEVICES PARTS.

APPROVALS	
PCB DES.	KIM T.
APP ENG.	ERIC B.

SCALE = NONE

ANALOG DEVICES
AHEAD OF WHAT'S POSSIBLE™

1630 McCarthy Blvd.
Milpitas, CA 95035
Tel: (408) 432-1900
www.analog.com

TITLE: SCHEMATIC

ISOLATED RS485 TRANSCEIVER

SIZE	IC NO.	REV.
N/A	LTC1535CSW DEMO CIRCUIT 241C	1

DATE: Monday, March 26, 2018

SHEET 1 OF 1