REVISION HISTORY				
ECO	REV	DESCRIPTION	APPROVED	DATE
–	2	PRODUCTION	JOSHUA Y.	10-14-14

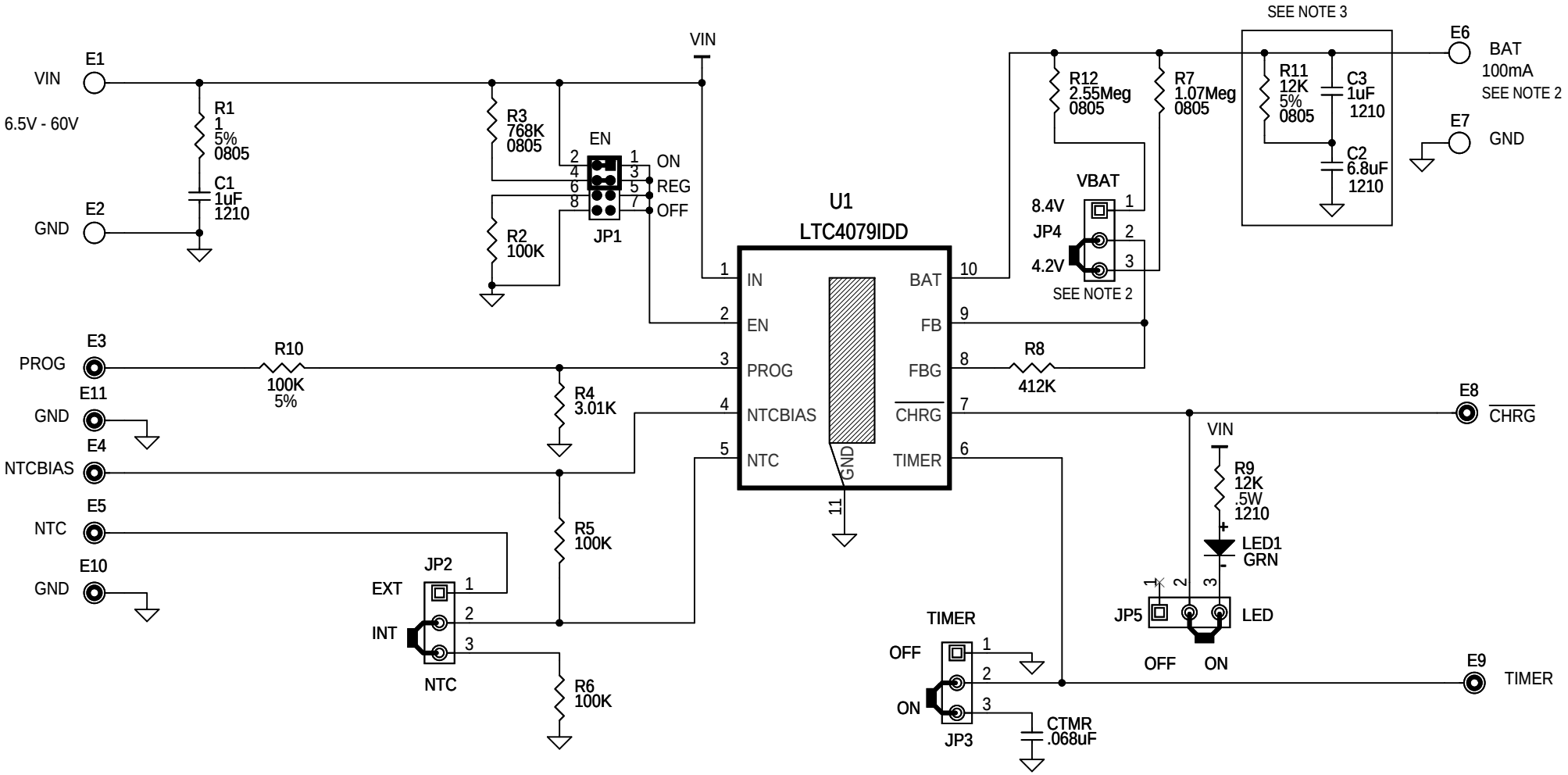

NOTES: UNLESS OTHERWISE SPECIFIED

1. ALL RESISTORS ARE IN OHMS, 1%, 0603.
   ALL CAPACITORS ARE IN MICROFARADS, 0603.
2. VBAT SET BY JP4. DO NOT CHANGE JP4 WITH VIN APPLIED.
3. OPTIONAL CIRCUIT FOR EVALUATION WITHOUT BATTERY.

CUSTOMER NOTICE

LINEAR TECHNOLOGY HAS MADE A BEST EFFORT TO DESIGN A CIRCUIT THAT MEETS CUSTOMER-SUPPLIED SPECIFICATIONS; HOWEVER, IT REMAINS THE CUSTOMER'S RESPONSIBILITY TO VERIFY PROPER AND RELIABLE OPERATION IN THE ACTUAL APPLICATION. COMPONENT SUBSTITUTION AND PRINTED CIRCUIT BOARD LAYOUT MAY SIGNIFICANTLY AFFECT CIRCUIT PERFORMANCE OR RELIABILITY. CONTACT LINEAR TECHNOLOGY APPLICATIONS ENGINEERING FOR ASSISTANCE.

THIS CIRCUIT IS PROPRIETARY TO LINEAR TECHNOLOGY AND SUPPLIED FOR USE WITH LINEAR TECHNOLOGY PARTS.

APPROVALS	
PCB DES.	LT
APP ENG.	JOSHUA Y.

SCALE = NONE

LINEAR TECHNOLOGY
1630 McCarthy Blvd.
Milpitas, CA 95035
Phone: (408)432-1900 www.linear.com
Fax: (408)434-0507
LTC Confidential-For Customer Use Only

TITLE: SCHEMATIC

60V LINEAR CHARGER WITH LOW QUIESCENT CURRENT

SIZE	IC NO.	REV.
N/A	LTC4079IDD DEMO CIRCUIT 2133A	2

DATE: Tuesday, October 14, 2014

SHEET 1 OF 1