REVISION HISTORY				
ECO	REV	DESCRIPTION	DATE	APPROVED
1	1	REBUILD WITH CHANGE	08/10/10	SAM Y.

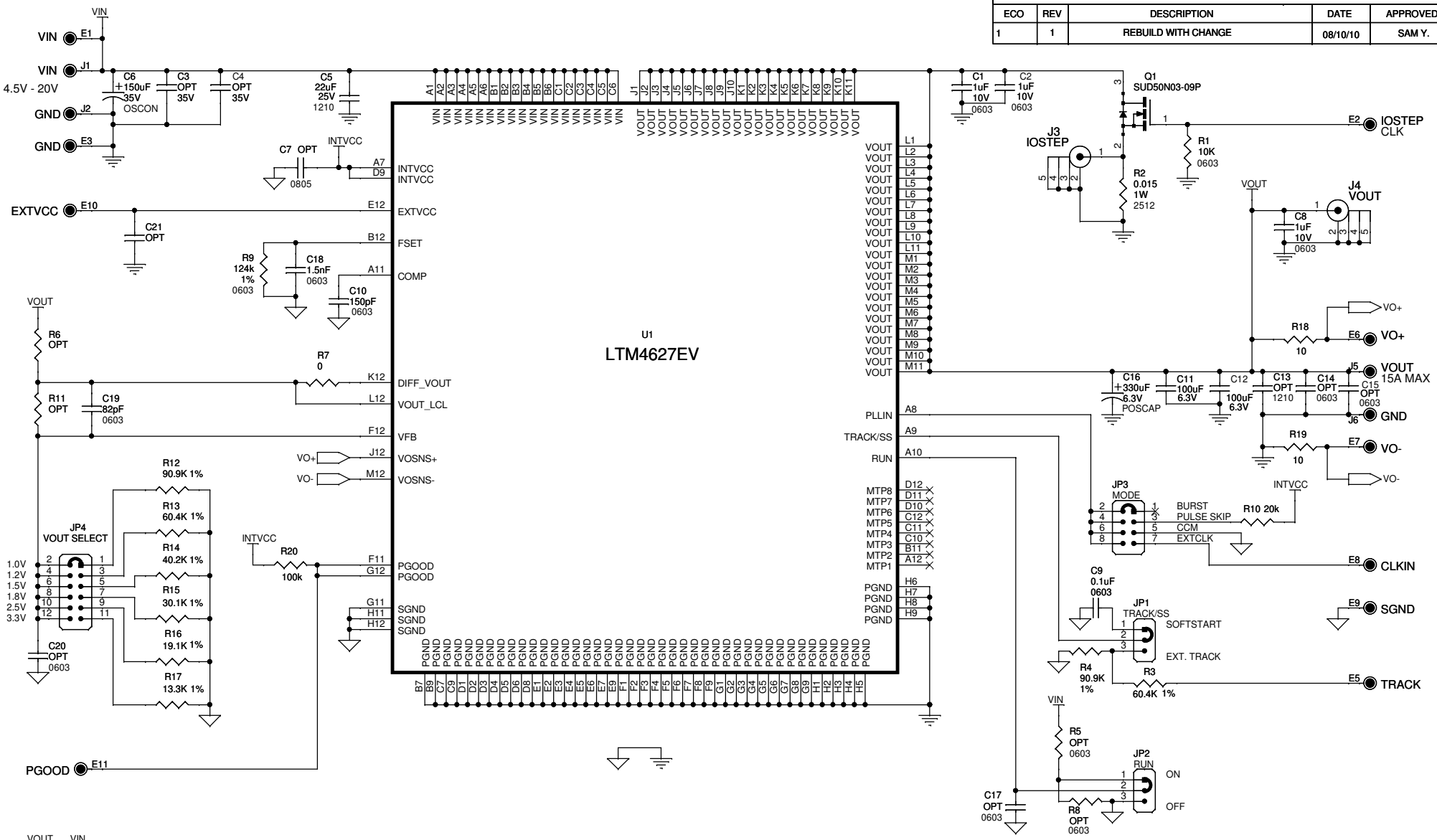

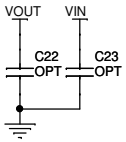

NOTES: UNLESS OTHERWISE SPECIFIED,

1. ALL RESISTORS AND CAPACITORS ARE 0603.

USED TO MANUFACTURE PCB

X3 X4 X5 X6

CUSTOMER NOTICE

LINEAR TECHNOLOGY HAS MADE A BEST EFFORT TO DESIGN A CIRCUIT THAT MEETS CUSTOMER-SUPPLIED SPECIFICATIONS; HOWEVER, IT REMAINS THE CUSTOMER'S RESPONSIBILITY TO VERIFY PROPER AND RELIABLE OPERATION IN THE ACTUAL APPLICATION. COMPONENT SUBSTITUTION AND PRINTED CIRCUIT BOARD LAYOUT MAY SIGNIFICANTLY AFFECT CIRCUIT PERFORMANCE OR RELIABILITY. CONTACT LINEAR TECHNOLOGY APPLICATIONS ENGINEERING FOR ASSISTANCE.

THIS CIRCUIT IS PROPRIETARY TO LINEAR TECHNOLOGY AND SUPPLIED FOR USE WITH LINEAR TECHNOLOGY PARTS.

APPROVALS	
PCB DES.	MI
APP ENG.	SAM Y.

SCALE = NONE

LINEAR TECHNOLOGY
1630 McCarthy Blvd.
Milpitas, CA 95035
Phone: (408)432-1900 www.linear.com
Fax: (408)434-0507
LTC Confidential-For Customer Use Only

TITLE: SCHEMATIC
HIGH EFFICIENCY 15A STEP-DOWN POWER μMODULE®

SIZE	IC NO.	REV.
N/A	LTM4627EV DEMO CIRCUIT 1669B	1

DATE: Wednesday, August 11, 2010 SHEET 1 OF 1