NOTES:

[1] DO NOT STUFF.

REVISION HISTORY				
ECO	REV	DESCRIPTION	DATE	APPROVED
	1	PROD	05/07/12	

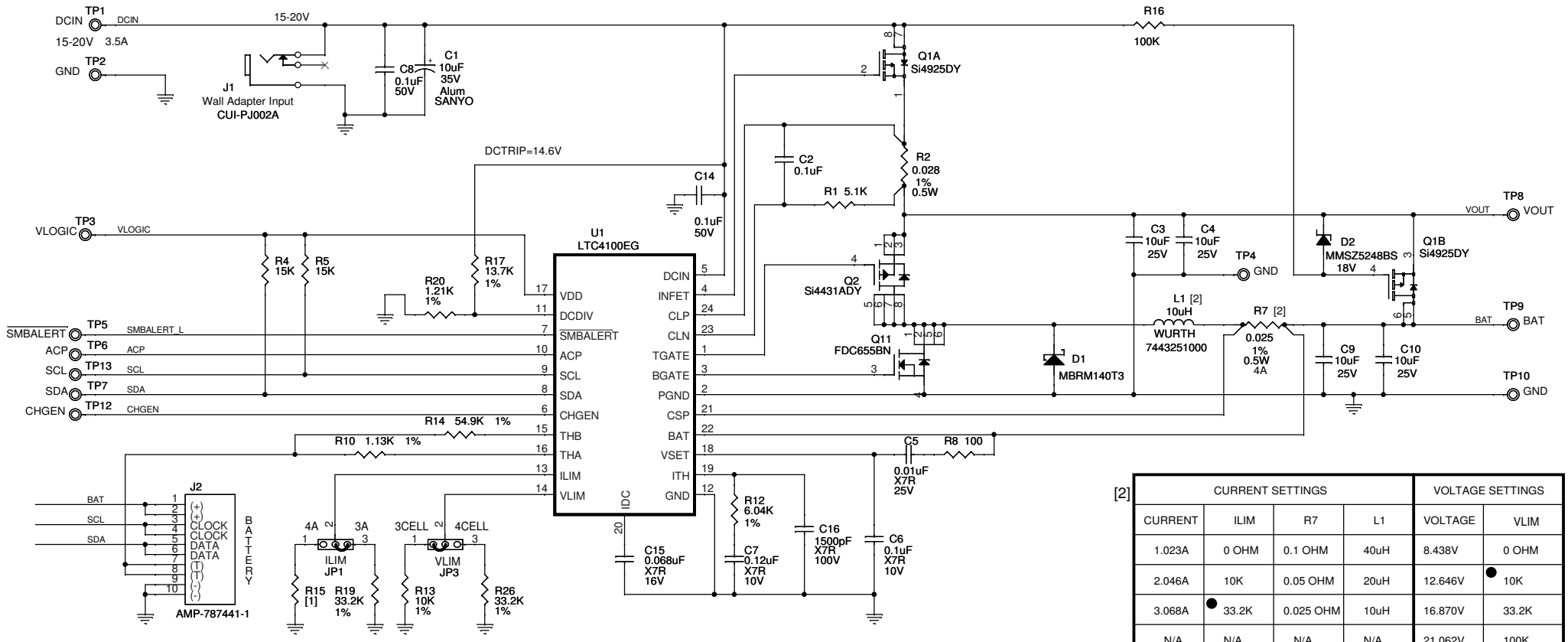

[2]

CURRENT SETTINGS				VOLTAGE SETTINGS	
CURRENT	ILIM	R7	L1	VOLTAGE	VLIM
1.023A	0 OHM	0.1 OHM	40uH	8.438V	0 OHM
2.046A	10K	0.05 OHM	20uH	12.646V	● 10K
3.068A	● 33.2K	0.025 OHM	10uH	16.870V	33.2K
N/A	N/A	N/A	N/A	21.062V	100K
4.094A	OPEN/VDD	0.025 OHM	10uH	32.758V	OPEN/VDD

● DEFAULT VALUE

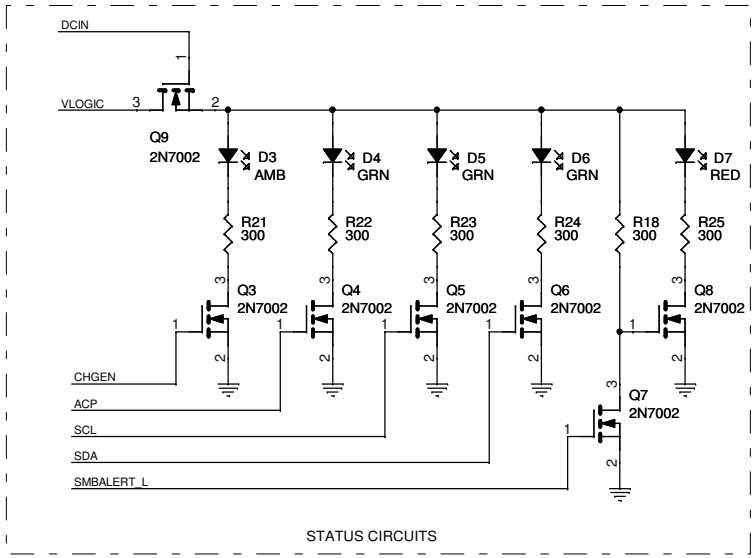

STATUS CIRCUITS

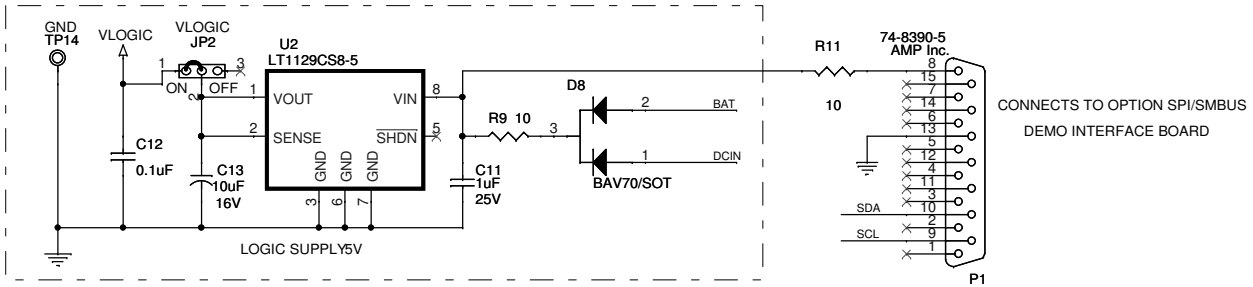

LOGIC SUPPLY5V

UNLESS OTHERWISE SPECIFIED DIMENSIONS ARE IN INCHES TOLERANCE ON ANGLE - - - 2 PLACES - - - 3 PLACES - - - INTERPRET DIM AND TOL PER ASME Y14.5M -1994

THIRD ANGLE PROJECTION

DO NOT SCALE DRAWING

CONTRACT NO.

APPROVALS	DATE
DRAWN MI	05/07/12
CHECKED	
APPROVED JOSH Y.	05/07/12
ENGINEER	
DESIGNER	

09/05/12 14:30:17

LINEAR TECHNOLOGY
1630 McCarthy Blvd.
Milpitas, CA 95035
Phone: (408)432-1900
Fax: (408)434-0507

TITLE SCH, LTC4100EGN SMART BATTERY CHARGER

SIZE	CAGE CODE	DWG NO	REV
Custom		DC512B	1

SCALE: NONE FILENAME: 512b-1.DSN SHEET 1 OF 1