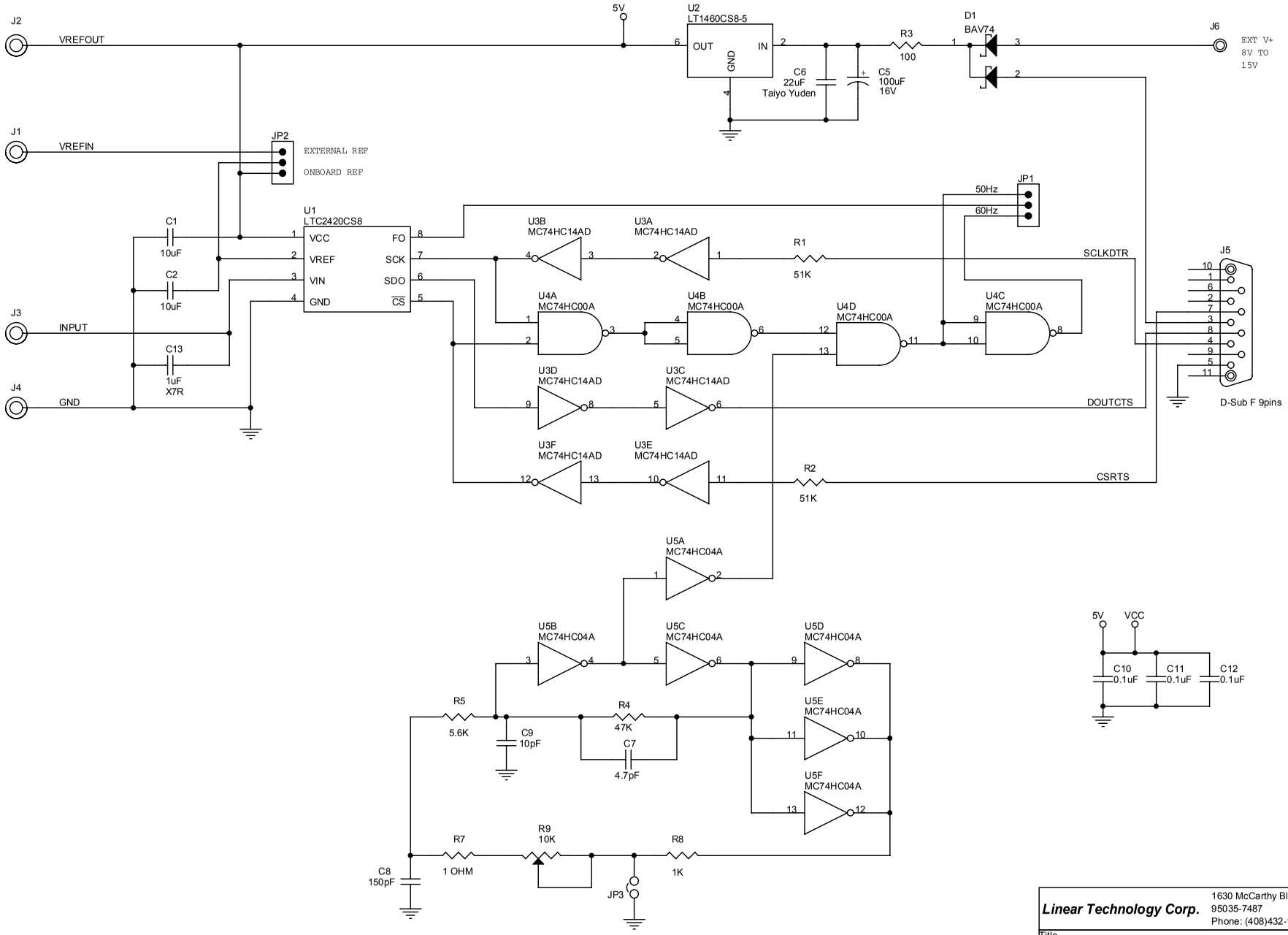

Linear Technology Corp.
1630 McCarthy Blvd., Milpitas, CA
95035-7487
Phone: (408)432-1900 Fax: (408)434-0507

Title	XXXXXXXXXXXXXX	
Size	Document Number DEMO BOARD 344	Rev A
Date: Thursday, November 02, 2000	Sheet 1 of 1	