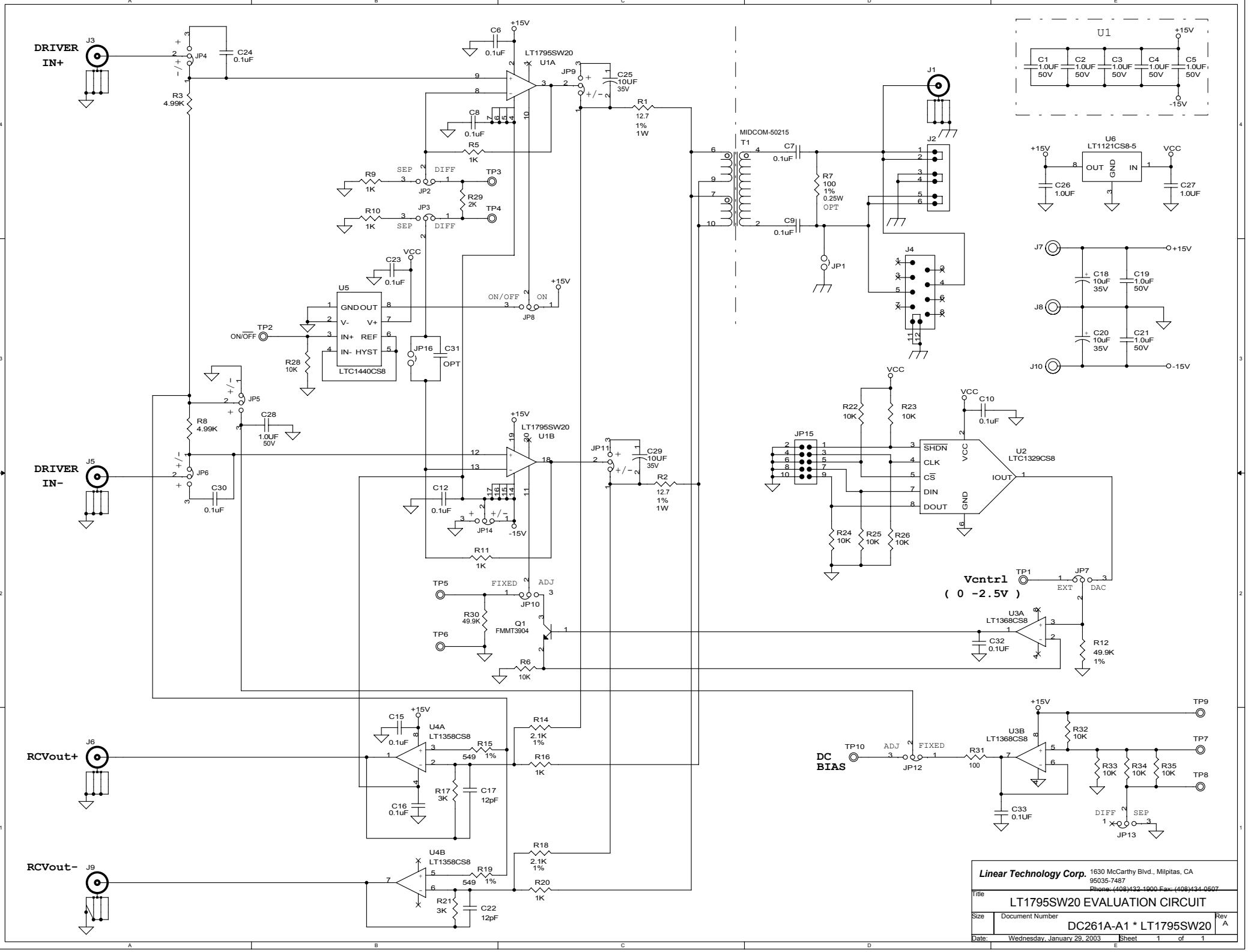
DRIVER IN+
J3
JP4
C24 0.1uF
R3 4.99K
C6 0.1uF
+15V
LT1795SW20
U1A
JP9
C25 10UF 35V
R1 12.7 1% 1W
C8 0.1uF
R5 1K
R9 1K
SEP
DIFF
JP2
TP3
R29 2K
R10 1K
JP3
TP4
VCC
C23 0.1uF
U5
GND OUT
V- V+
IN+ REF
IN- HYST
LTC1440CS8
ON/OFF
ON
JP8
TP2
ON/OFF
R28 10K
JP16
C31 OPT
JP5
R8 4.99K
C28 1.0UF 50V
DRIVER IN-
J5
JP6
C30 0.1uF
LT1795SW20
U1B
JP11
C29 10UF 35V
R2 12.7 1% 1W
C12 0.1uF
JP14
-15V
R11 1K
TP5
FIXED
ADJ
JP10
R30 49.9K
Q1 FMMT3904
TP6
R6 10K
MIDCOM-50215
T1
C7 0.1uF
C9 0.1uF
R7 100 1% 0.25W OPT
JP1
J1
J2
J4
U1
C1 1.0UF 50V
C2 1.0UF 50V
C3 1.0UF 50V
C4 1.0UF 50V
C5 1.0UF 50V
U6
LT1121CS8-5
OUT GND IN
C26 1.0UF
C27 1.0UF
J7
J8
J10
C18 10uF 35V
C19 1.0uF 50V
C20 10uF 35V
C21 1.0uF 50V
R22 10K
R23 10K
JP15
C10 0.1uF
SHDN
CLK
CS
DIN
DOUT
VCC
GND
IOUT
U2
LTC1329CS8
R24 10K
R25 10K
R26 10K
Vcontrol
(0 -2.5V)
TP1
JP7
EXT
DAC
U3A
LT1368CS8
C32 0.1UF
R12 49.9K 1%
RCVout+
J6
C15 0.1uF
U4A
LT1358CS8
R15 549 1%
R14 2.1K 1%
R16 1K
R17 3K
C17 12pF
C16 0.1uF
RCVout-
J9
U4B
LT1358CS8
R19 549 1%
R18 2.1K 1%
R20 1K
R21 3K
C22 12pF
DC BIAS
TP10
ADJ
FIXED
JP12
R31 100
U3B
LT1368CS8
R32 10K
TP9
TP7
TP8
R33 10K
R34 10K
R35 10K
C33 0.1UF
DIFF
SEP
JP13
Linear Technology Corp.
1630 McCarthy Blvd., Milpitas, CA 95035-7487
Phone: (408)432-1900 Fax: (408)434-0507
Title
LT1795SW20 EVALUATION CIRCUIT
Size
Document Number
DC261A-A1 * LT1795SW20
Rev A
Date: Wednesday, January 29, 2003
Sheet 1 of 1