REVISION HISTORY				
ECO	REV	DESCRIPTION	APPR	DATE
	1	PRODUCTION	CUYLER L.	10/01/2010

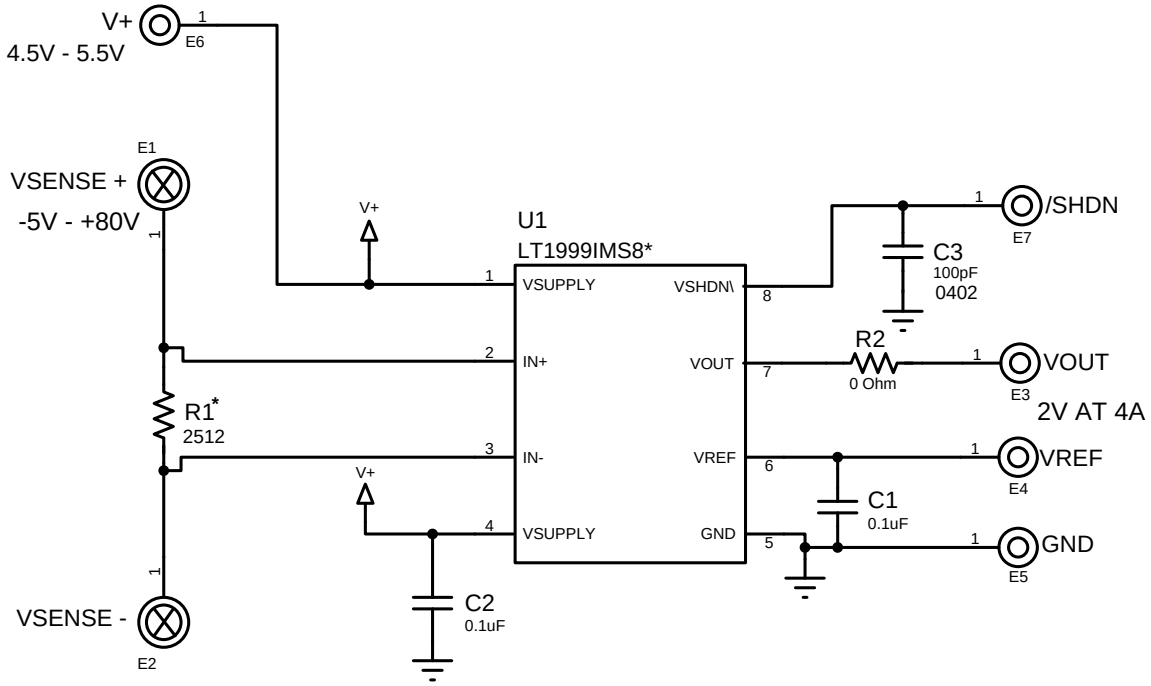

ASSY	U1	R1
-A	LT1999IMS8-10	0.05 ohm
-B	LT1999IMS8-20	0.025 ohm
-C	LT1999IMS8-50	0.01 ohm

NOTES: UNLESS OTHERWISE SPECIFIED

1. ALL RESISTORS ARE IN OHMS, 0603
2. ALL CAPACTORS ARE IN MICROFARADS, 0603

CUSTOMER NOTICE

LINEAR TECHNOLOGY HAS MADE A BEST EFFORT TO DESIGN A CIRCUIT THAT MEETS CUSTOMER-SUPPLIED SPECIFICATIONS; HOWEVER, IT REMAINS THE CUSTOMER'S RESPONSIBILITY TO VERIFY PROPER AND RELIABLE OPERATION IN THE ACTUAL APPLICATION. COMPONENT SUBSTITUTION AND PRINTED CIRCUIT LAYOUT MAY SIGNIFICANTLY AFFECT CIRCUIT PERFORMANCE OR RELIABILITY. CONTACT LINEAR TECHNOLOGY APPLICATIONS ENGINEERING FOR ASSISTANCE.

THIS CIRCUIT IS PROPRIETARY TO LINEAR TECHNOLOGY AND SUPPLIED FOR USE WITH LINEAR TECHNOLOGY PARTS.

APPROVALS	
PCB DES.	CL
APP ENG.	CUYLER L.

SCALE = NONE

LINEAR TECHNOLOGY

1630 McCarthy Blvd.
Milpitas, CA 95035
PH: (408) 432-1900
WWW.LINEAR.COM

LTC CONFIDENTIAL FOR-CUSTOMER USE ONLY

TITLE: SCHEMATIC

HIGH VOLTAGE BI-DIRECTIONAL CURRENT SENSE

SIZE	IC NO.	REV
N/A	LT1999IMS8-10/-20/-50 DEMO CIRCUIT 1698A	1

DATE: 10/2010

SH 1 of 1