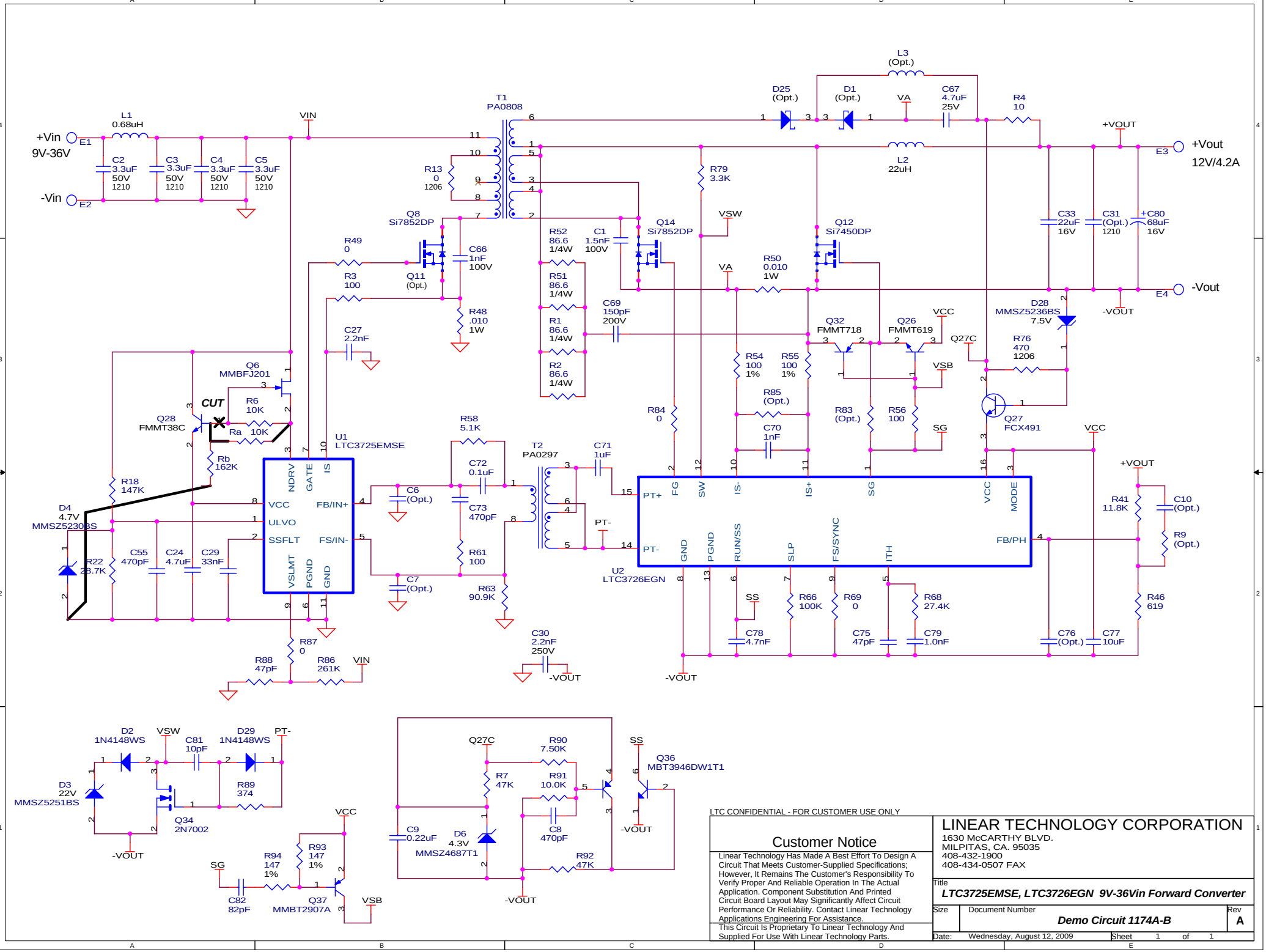

LTC CONFIDENTIAL - FOR CUSTOMER USE ONLY

Customer Notice

Linear Technology Has Made A Best Effort To Design A Circuit That Meets Customer-Supplied Specifications; However, It Remains The Customer's Responsibility To Verify Proper And Reliable Operation In The Actual Application. Component Substitution And Printed Circuit Board Layout May Significantly Affect Circuit Performance Or Reliability. Contact Linear Technology Applications Engineering For Assistance.

This Circuit Is Proprietary To Linear Technology And Supplied For Use With Linear Technology Parts.

LINEAR TECHNOLOGY CORPORATION
1630 McCARTHY BLVD.
MILPITAS, CA. 95035
408-432-1900
408-434-0507 FAX

Title: ***LTC3725EMSE, LTC3726EGN 9V-36Vin Forward Converter***

Size	Document Number	Rev
	Demo Circuit 1174A-B	**A**

Date: Wednesday, August 12, 2009 Sheet 1 of 1