ADI Multichannel Source Measurement Unit (SMU) Solution

Application Introduction

A source measure unit (SMU) is widely used in the field of test and measurement. Examples of where it is used include I-V characteristic curve tests for semiconductors, parameter tests for various nonlinear devices or materials, and charge or discharge tests for various types of batteries. SMUs can operate in four quadrants of a V/I coordinate axis and can measure another type of signal while outputting one. The functions that used to be completed by multiple instruments can be now realized by a single SMU. Many well proven SMU products, commonly built with discrete devices, have been put on the market. These SMUs can realize a variety of current /voltage output combinations and accurate measurement, with the disadvantages of a complex structure and high cost. This article introduces an SMU reference design that is composed of an AD5522 master controller plus voltage/current amplifier stage.

Applications: ATE, desktop instrument (SMU), laser device test, battery simulator, discrete device test, FCT test.

Difficulties in Design

Controller Loop Design in All Quadrants

Building a whole controller loop with discrete devices for force voltage/measure and clamp current, as well as force current/measure and clamp voltage, in all quadrants is a complicated process. Using the AD5522 as the master controller not only integrates the loop controller and clamping functions of force voltage and force current, but the AD5522 also integrates multiple shunt resistors to realize multirange current measurement. The AD5522 also has both CCOMP and CFF pins that cooperate with an external multiplexer to realize a variety of compensation and feed forward network selections. These selections can adapt to various complex external DUT load parameter configurations.

High Integration and Low Noise

If the output noise needs to be reduced while the channel density is increased, a solution using all linear stages cannot be used in ATE due to low channel density, while a solution using all switching stages is also not suitable due to high noise. This solution adopts switching stage and linear stage modulation, which combine the high density of a switching stage and the low noise of a linear stage, among which ADI's second-generation Silent Switcher® integrated switching converters LT8646S and LT8648S are used in the switching stage. These devices achieve much lower output noise than an ordinary dc-to-dc converter.

Output Stage Dynamic Power Consumption Adjustment

Generally, the power consumption of SMU output stage devices limits the output power range of an SMU. The unique dynamic tracking mode of an output stage power supply in this solution greatly reduces the power consumption of the output stage, so that the input and output capabilities of the I and III quadrants can reach the maximum rating provided by the power supply, and the output stage can also work in a fixed power supply voltage mode to provide the fastest pulse voltage/current output capability.

Current Multirange Controller and Measurement

This solution provides shunt resistors and switching circuits of multiple ranges, which can achieve full coverage of output and measurement in multiple ranges from large current to small current. The current detection circuit works at the high-side of the power supply and can realize high CMRR sampling by using ADI's unique high voltage differential amplifier LT1997-3 integrated with precision matching resistors. High-side current sampling also provides great convenience for multichannel parallel connection.

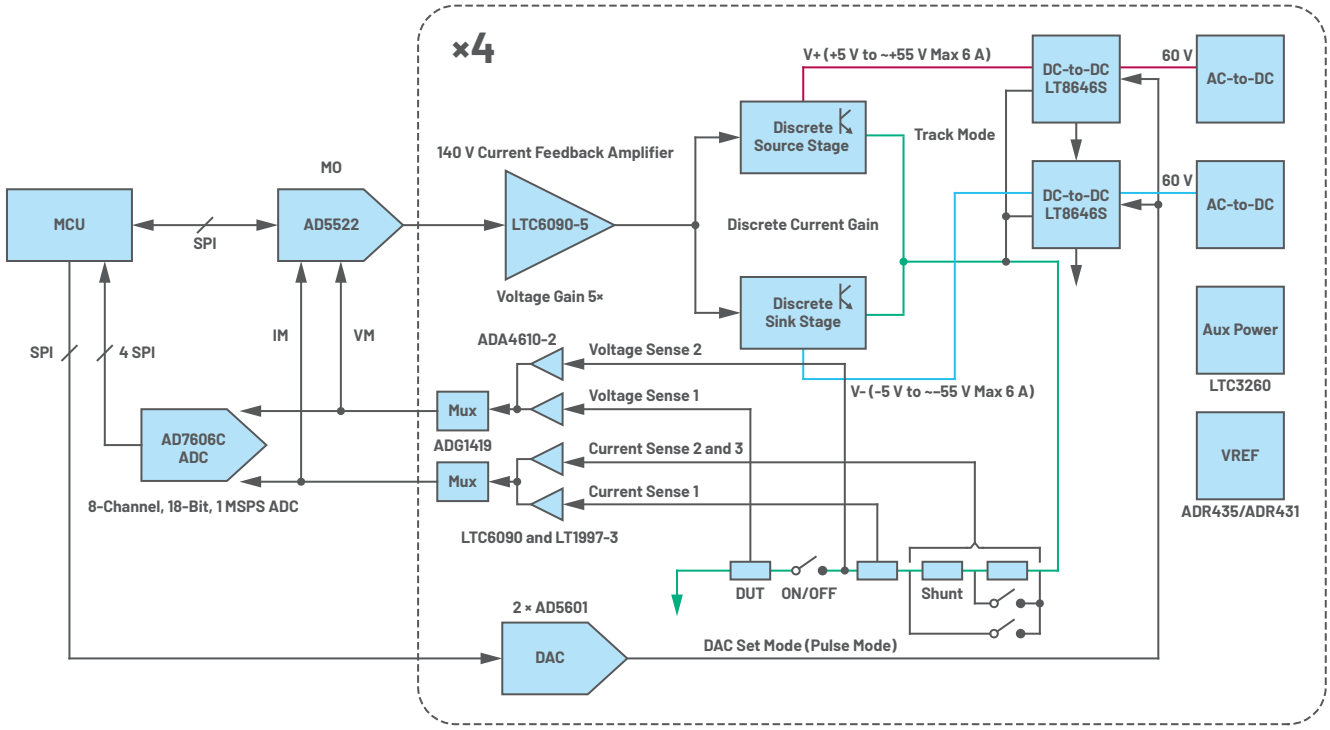

Figure 1. ±50 V/±5 A SMU system block diagram.

ADI Solution 1: High Voltage and High Current SMU Design Reference Solution

In this design solution, AD5522 is used as the master controller of the system. The AD5522 not only completes the loop controller of FV and FI, but also clamps current and voltage to ensure the safety of the DUT. Although the clamping function is of great importance, many simple SMUs built with discrete devices fail to have this function, which increases potential safety hazards to the DUT. AD5522 also has feed forward and loop compensation pins that use a multichannel analog switch to connect feed forward and compensation to the external capacitors of various configurations. According to the different capacitive and inductive load characteristics of DUT, different capacitors can be switched to achieve the highest response speed and the best stability. The LTC6090-5 current-mode, high speed, and high voltage operational amplifier is used for voltage amplification. It has a small signal bandwidth of 24 MHz, a slew rate of 37 V/µs, and a voltage output range of ±70 V, which is suitable for SMU applications in the range of ±50 V. After the voltage is amplified, it is connected to the power transistors for current amplification to realize the current input and output range of ±5 A. These power tubes are connected in parallel with proper current sharing, which can realize greater current output capability.

In this solution, multiple high-side shunt resistors are used to realize the current detection combination in multiple current ranges. There are three range combinations—0 mA to ~1 mA, 1 mA to ~100 mA, and 100 mA to ~5 A—that can realize manual and automatic switching between multiple ranges with software. In order to reduce the leakage current, the high voltage operational amplifier LTC6090 is used as the voltage follower in the current detection circuit, which is coordinated with the high voltage differential amplifier LT1997-3 integrated with precision matching resistor to realize high CMRR sampling. The measurement outputs of different ranges are then connected to an ADG1419 analog switch, and sent to AD5522 and an ADC for loop controllers, current clamping input, and current sampling.

For some designs that require the test system to be electrically isolated from DUT when it is out of service, it is usually necessary to add relays to the output part. In order to ensure that the internal controller loop is not disconnected when the relay is open and to make sure that there is no voltage overshoot at the output when the relay is closed, the voltage feedback usually needs to be switched to the internal output before the relay is turned off. The voltage feedback also uses the high voltage operational amplifier LTC6090 of the current detection, and after the output buffering, it is connected to the ADA4610-2 configured as a differential amplifier, and finally sent to the AD5522 and an ADC for voltage feedback, voltage clamping input, and voltage sampling.

For the ADC, we recommend using the new 8-channel, synchronous sampling AD7606 or the AD7606C-18, with a sampling rate of 16/18 bits and 1 Mbps. These new ADCs integrate analog input impedance over 1 MΩ, a PGA with adjustable gain, input low-pass filtering, and a 2.5 V reference. They operate with a 5 V analog working power supply and 3.3 V interface driving power supply. Their maximum differential bipolar input range is ±20 V, with a single-ended bipolar input range of ±12.5 V and a single-ended unipolar range of 0 V to 12.5 V. They also realize an extremely low temperature drift of 1 ppm°C full-scale error. In this design, the AD7606C-18 supports synchronous voltage and current sampling of four SMU channels. The voltage sampling range is set at a single-ended bipolar input range of ±12.5 V, the current sampling range is set at a single-ended bipolar input range of ±2.5 V, and an RC low-pass filter network with balanced input impedance is added at the ADC input.

The power supply uses the LT8646S, a second-generation Silent Switcher integrated switching converter that supports a 65 V voltage input and 8 A current output. LT8646S can be configured to track the SMU output mode or DAC setting mode in this design. When configured in tracking mode, the output of the LT8646S will always follow the output of the SMU and add or substract headroom voltage based on the output voltage of the SMU, which makes the power consumption of the current amplification stage keep on the headroom voltage × output/input current regardless of the output voltage value. This tracking mode greatly reduces the power consumption of the output stage and provides the possibility of full power output under limited heat dissipation conditions. The LT8646S has a 32-lead, 6 mm × 4 mm LQFN package with a typical thermal resistance of 21°C/W, and it can provide lower thermal resistance when using a heat sink. When used with high input voltage and high current output, the high switching loss caused by high voltage necessitates proper heat dissipation methods to prevent the device from entering a protection state due to high junction temperature. The LTC3260 is a simple and easy to use device that integrates charge pump and an LOD regulator to convert a positive power supply to a bipolar power supply, which provides a pair of positive and negative power supplies with small power and low ripple. These characteristics are especially suitable when auxiliary power is supplied from ±24 V to ±15 V.

ADI Solution 2: High Voltage and Low Current SMU Design Reference Solution

Solution 2 follows the circuit structure in Solution 2. The main difference is that there are more LTC6090-5 op amps used instead of the voltage and current amplifier stages in Solution 1. The two LT6090-5 op amps work in parallel to achieve a total current input and output range of ±100 mA, while providing the same voltage output range of ±50 V. The application of this solution requires the output currents of the two op amps to be equalized to prevent any unbalanced output. More LT6090-5 op amps can be connected in parallel to achieve a larger output current, if required. As the current output stage composed of discrete circuits used in Solution 1 occupies a large PCB area, the channel density under the condition of small current demand can be greatly improved by using more LT6090-5 op amps in parallel. In this solution, the output tracking circuit of the power supply is reserved, so that the power consumption of an LT6090-5 is reduced to the greatest extent when a large current is output.

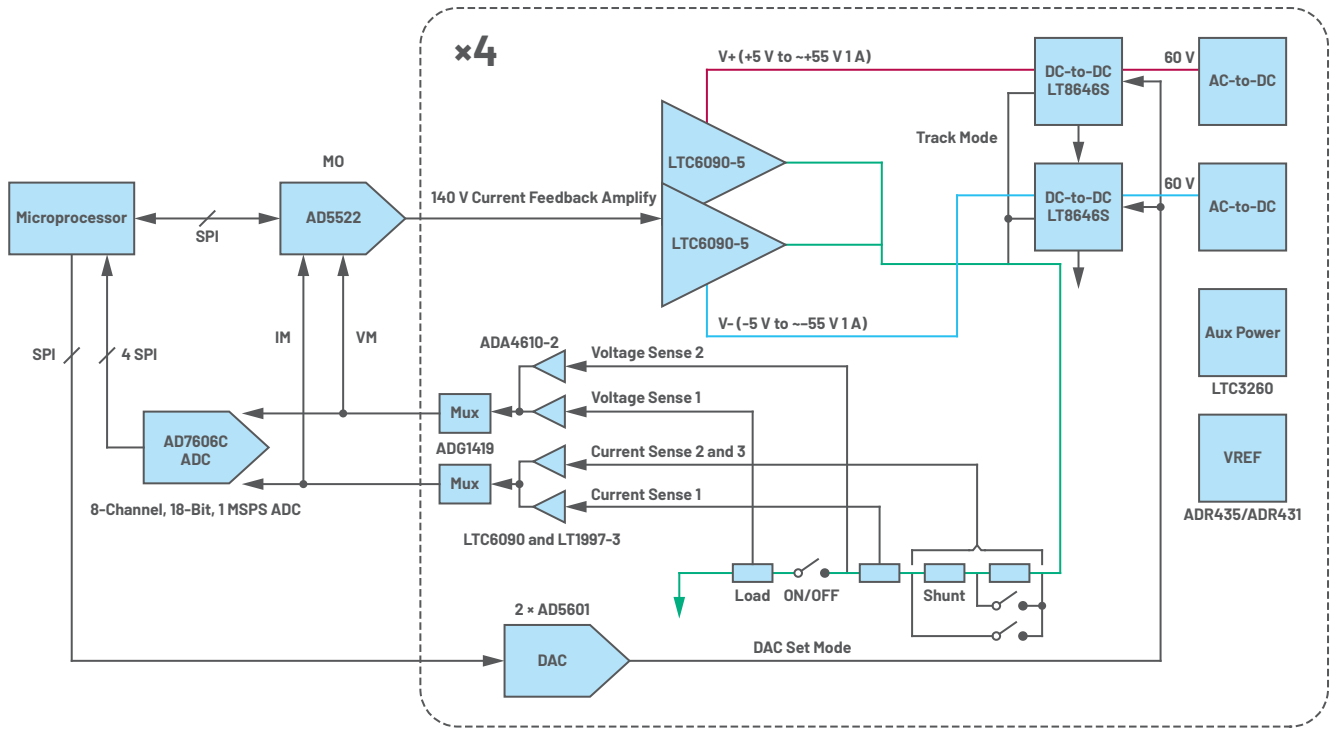

Figure 2. ±50 V/±100 mA SMU system block diagram.

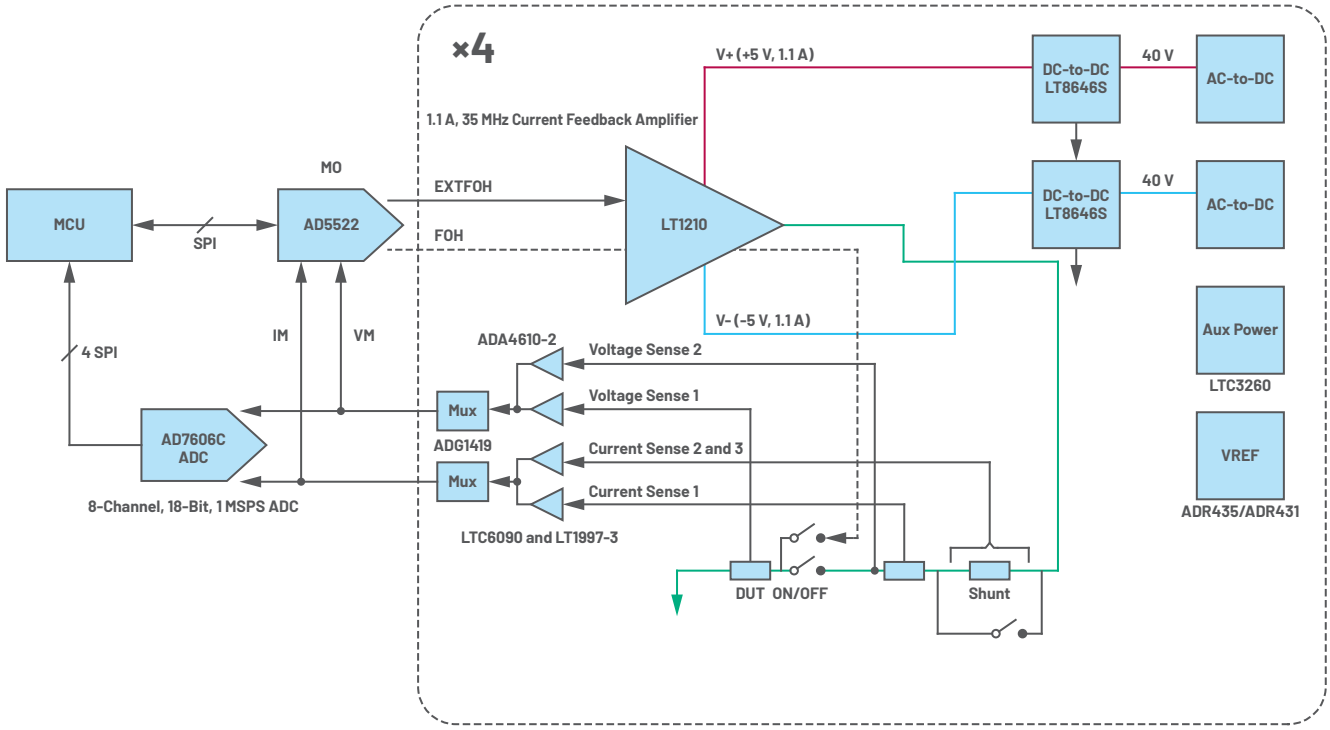

Figure 3. ±15 V/±1 A SMU system block diagram.

ADI Solution 3: Low Voltage and Low Current SMU Design Reference Solution

Solution 3 follows the circuit structure used in Solution 1, with the exception that LT1210 is used instead of the voltage and current amplifier stage in Solution 1. LT1210 has a small signal bandwidth of 35 MHz and a slew rate of 900 V/µV. It can continuously output a current of 1.1 A and has a peak value of 2 A. For current ranges less than 2 mA, this solution uses the small range FOH of AD5522 as the output. The AD5522 integrates current range of ±5 µA, ±20 µA, ±200 µA, and ±2 mA to realize accurate small current measurement. When large current output is needed, LT1210 can be switched to EXTFOH to drive the LT1210's output. Additional ranges are no longer needed for large current measurement, and two ranges are generally enough. In the power supply design, the LT8648S switching converter, with its large output capacity, can be used to support the power supply of more SMU channels. The LT8648S has a form factor and thermal resistance similar to the LT8646S. Proper heat dissipation methods are also necessary to avoid high junction temperature. An input voltage of 40 V or lower is recommended to reduce switching losses.

Table 1. Main Products

Part	Description	Applications
PMU		
AD5522	Quad parametric measurement unit with integrated 16-bit level setting DACs	Suitable for ATE equipment, SMU, and precision controller and measurement
DAC		
AD5601	2.7 V to 5.5 V, <100 µA, 8-/10-/12-bit nanoDAC	Suitable for general voltage settings
ADC		
AD7606C-18/ AD7606	8-channel DAS with 16-/18-bit, 1 MSPS bipolar input, simultaneous sampling ADC	Suitable for occasions where high speed, multichannel synchronous data sampling is needed
Reference		
ADR431/ ADR435	Low noise XFET voltage references with current sink and source capability	Suitable for voltage reference of precision test and measurement
Amp		
LTC6090/ LTC6090-5	140 V CMOS rail-to-rail output, picoamp input current op amp	Suitable for applications where high voltage drive is needed
LT1210	1.1 A, 35 MHz current feedback amplifier	Suitable for applications with low voltage, high speed, and large driving current, such as test equipment output driving
LT1997-3	Precision, wide voltage range gain selectable amplifier	Suitable for differential mode signal extraction under high common-mode voltage, especially for high-side current detection
ADA4610-2	Low noise, precision, rail-to-rail output, JFET single/dual/quad op amps	Universal precision operational amplifier
Mux		
ADG1419	2.1 Ω on resistance, ±15 V/+12 V/±5 V, *i*CMOS SPDT switch	Suitable for small signal switching, compensation capacitor selection, and other applications
Power		
LT8646S	65 V, 8 A synchronous step-down Silent Switcher 2 device with 2.5 µA quiescent current	Power converter with high power density and low noise
LT8648S	42 V, 15 A synchronous step-down Silent Switcher 2 device	Power converter with high power density, high current, and low noise
LTC3260	Low noise, dual-supply, inverting charge pump	Suitable for low power auxiliary positive and negative power supply with low ripple under single power supply

Design Resources

Further Reading

- Application Note AN-1574: Parametric Measurement Unit and Supporting Components for ATE Applications Using the AD5522 PMU and the AD7685 16-Bit ADC
- MT-034 Tutorial: Current Feedback (CFB) Op Amps
- MT-057 Tutorial: High Speed Current Feedback Op Amps
- Design Note DN513: High Voltage CMOS Amplifier Enables High Impedance Sensing with a Single IC
- User Guide UG-1870: Evaluating the AD7606C-18 8-Channel DAS with 18-Bit, 1 MSPS Bipolar Input, Simultaneous Sampling ADC

Design Tool/Forums

- LTspice®: ADI circuit simulator tool
  analog.com/en/ltspice-simulator.html
- EngineerZone®: Online technical support community
  ez.analog.com

Engage with the ADI technology experts in our online support community. Ask your tough design questions, browse FAQs, or join a conversation.

ADI EngineerZone™
SUPPORT COMMUNITY

Visit *ez.analog.com*

ANALOG DEVICES
AHEAD OF WHAT'S POSSIBLE™

For regional headquarters, sales, and distributors or to contact customer service and technical support, visit analog.com/contact.

Ask our ADI technology experts tough questions, browse FAQs, or join a conversation at the EngineerZone Online Support Community. Visit ez.analog.com.

BR348449-1/21

VISIT ANALOG.COM