THIS DRAWING IS THE PROPERTY OF ANALOG DEVICES INC. IT IS NOT TO BE REPRODUCED OR COPIED, IN WHOLE OR IN PART, OR USED IN FURNISHING INFORMATION TO OTHERS, OR FOR ANY OTHER PURPOSE DETRIMENTAL TO THE INTERESTS OF ANALOG DEVICES.
THE EQUIPMENT SHOWN HEREON MAY BE PROTECTED BY PATENTS OWNED OR CONTROLLED BY ANALOG DEVICES.

RELAY CONTROL CHART

CONTROL	CODE	DEVICE	FUNCTION	CONNECTOR

JUMPER TABLE

JP#	ON	OFF
1		
2		
3		
4		
5		

* SEE ASSEMBLY INSTRUCTIONS

REVISIONS

REV	DESCRIPTION	DATE	APPROVED
A	INITIAL RELEASE	19JUL23	E. REYTA
B	ECR-116882	05DEC23	E. REYTA

BUILDING STRUCTURE SENSOR NODE

P.O SPEC.	BK/BD SPEC.	SOCKET OEM	OEM PART#	HANDLER

TEMPLATE ENGINEER BILLY PHILLIPS	DATE 07APR21	SCHEMATIC
HARDWARE SERVICES BOB MACDONALD	07APR21	
HARDWARE SYSTEMS DAVE WILLIAMS	07APR21	
TEST ENGINEER N/A	N/A	
COMPONENT ENGINEER ADGT LIBRARY	19JUL23	
TEST PROCESS N/A	N/A	
HARDWARE RELEASE C. PASIA	05DEC23	
DESIGNER C. PASIA	05DEC23	
PTD ENGINEER E. REYTA	05DEC23	
CHECKER N/A	N/A	

HW TYPE : Customer Evaluation
Product(s): ADXL343
: ADIS6203, MAX30210
PACKAGE : LeadCount-lead BodySize PackageType-family
: Pitch-pitch StyleVendor Style
<User Define>
<User Define>
<User Define>

MASTER PROJECT TEMPLATE TBD
TESTER TEMPLATE 064489_c

UNLESS OTHERWISE SPECIFIED DIMENSIONS ARE IN INCHES
TOLERANCES
DECIMALS X.XX +-0.010 X.XXX +-0.005
FRACTIONS +-1/32
ANGLES +-2

DRAWING NO. 02_079919
REV. B
SIZE D
SCALE 1:1
CODE ID NO. CodeID
SHEET 1 OF 2

REVISIONS			
REV	DESCRIPTION	DATE	APPROVED

ACCELERATION SENSOR

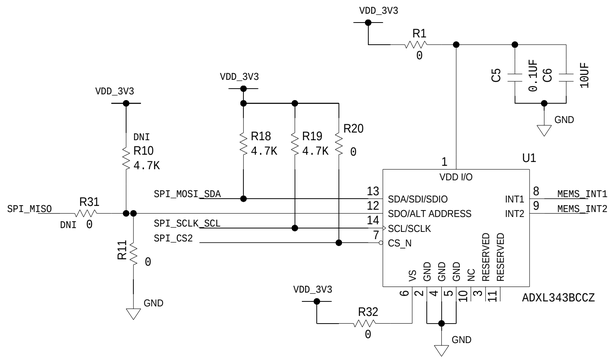

NOTE: 0X53 DEFAULT I2C ADDRESS

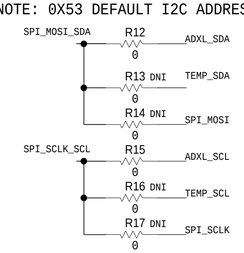

TILT SENSOR

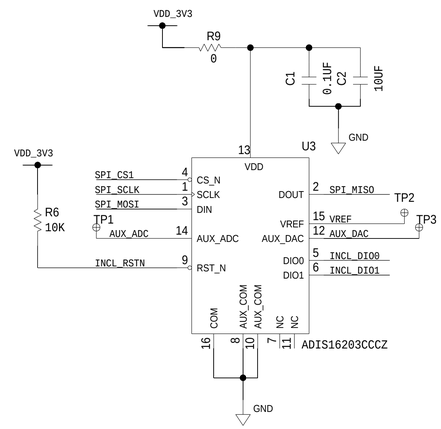

ARDUINO CONNECTORS

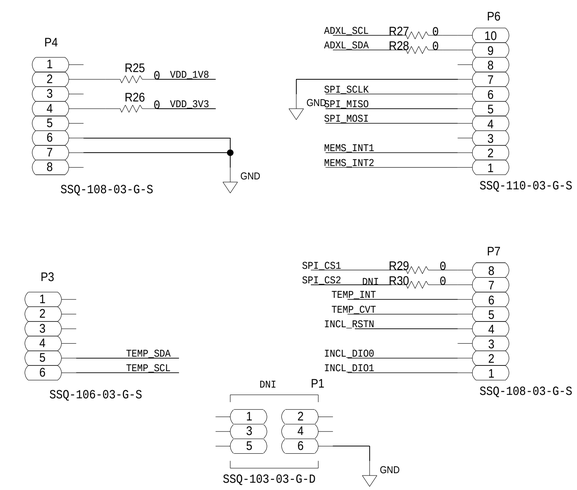

TEMP SENSOR

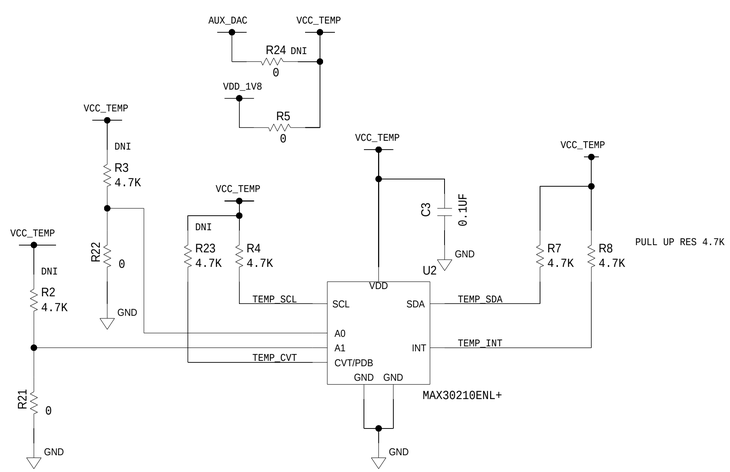

NOTE: 0X80 DEFAULT I2C ADDRESS

ANALOG DEVICES

SCHEMATIC

HW TYPE : Customer Evaluation
Product(s): ADXL343
: ADIS6203, MAX30210

THIS DRAWING IS THE PROPERTY OF ANALOG DEVICES INC.
IT IS NOT TO BE REPRODUCED OR COPIED, IN WHOLE OR
IN PART, OR USED IN FURNISHING INFORMATION TO OTHERS,
OR FOR ANY OTHER PURPOSE DETRIMENTAL TO THE INTERESTS
OF ANALOG DEVICES.
THE EQUIPMENT SHOWN HEREON MAY BE PROTECTED BY PATENTS
OWNED OR CONTROLLED BY OWNED ANALOG DEVICES.

DESIGN VIEW	DRAWING NO.	REV
<DESIGN_VIEW>	02_079919	B
PTD ENGINEER: E. REYTA	SIZE D / SCALE 1:1	SHEET 2 OF 2