THIS DRAWING IS THE PROPERTY OF ANALOG DEVICES INC. IT IS NOT TO BE REPRODUCED OR COPIED, IN WHOLE OR IN PART, OR USED IN FURNISHING INFORMATION TO OTHERS, OR FOR ANY OTHER PURPOSE DETRIMENTAL TO THE INTERESTS OF ANALOG DEVICES.
THE EQUIPMENT SHOWN HEREON MAY BE PROTECTED BY PATENTS OWNED OR CONTROLLED BY ANALOG DEVICES.

RELAY CONTROL CHART

CONTROL	CODE	DEVICE	FUNCTION	CONNECTOR

JUMPER TABLE

JP#	ON	OFF
1		
2		
3		
4		
5		

* SEE ASSEMBLY INSTRUCTIONS

REVISIONS

REV	DESCRIPTION	DATE	APPROVED
A	INITIAL RELEASE	19NOV21	A.UY
B	ECR-111942	24MAR23	A.UY
C	ECR-115064	28JUL23	A.UY

EVAL-CN0583-SOMZ

SMOKE DETECTOR SYSTEM ON MODULE (SOM)

SHEET 1 : FRONT PAGE

SHEET 2 : SMOKE DETECTION MODULE, TEMPERATURE SENSOR AND MICROCONTROLLER

SHEET 3 : POWER REGULATION

SHEET 3 : CASTELLATED HOLES PINOUT

P.O SPEC.	BK/BD SPEC.	SOCKET OEM	OEM PART#	HANDLER

TEMPLATE ENGINEER -	DATE	SCHEMATIC
HARDWARE SERVICES M. VALE	19NOV21	HW TYPE : Customer Evaluation Z Product(s): ADPD188BI : ADT7302 PACKAGE : 24-lead 3.8X5.0X1.0 LGA_CAV-family : Pitch-pitch StyleVendor Style <User Define> <User Define> <User Define>
HARDWARE SYSTEMS -		
TEST ENGINEER -		
COMPONENT ENGINEER N. CATALAN	13JUL23	
TEST PROCESS -		
HARDWARE RELEASE K. JABATAN	19NOV21	
DESIGNER M. VALE	19NOV21	MASTER PROJECT TEMPLATE TBD / TESTER TEMPLATE 067706_a
PTD ENGINEER A. UY	19NOV21	UNLESS OTHERWISE SPECIFIED DIMENSIONS ARE IN INCHES TOLERANCES DECIMALS X.XX +-0.010 X.XXX +-0.005 FRACTIONS +-1/32 ANGLES +-2
CHECKER -		

ANALOG DEVICES

DRAWING NO. 02_068743 REV. C

SIZE D | SCALE 1:1 | CODE ID NO. CodeID | SHEET 1 OF 4

REVISIONS			
REV	DESCRIPTION	DATE	APPROVED

MICROCONTROLLER

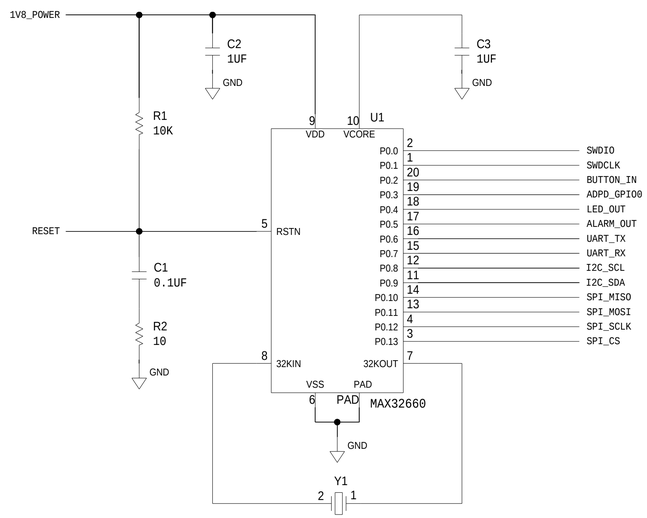

SMOKE DETECTION MODULE

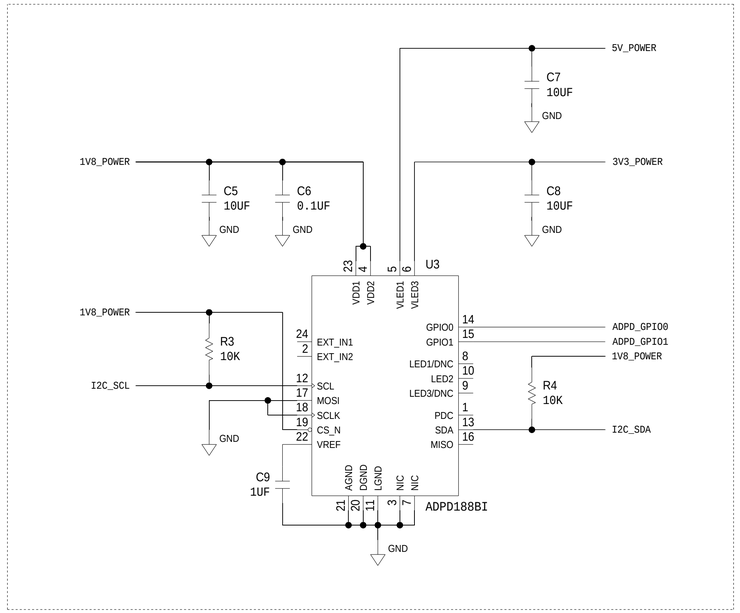

TEMPERATURE SENSOR

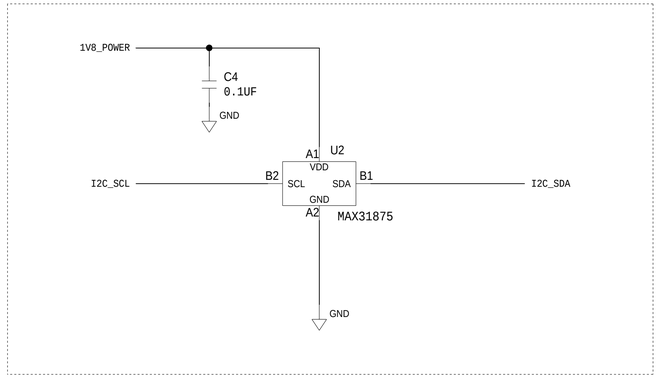

UART CONNECTOR

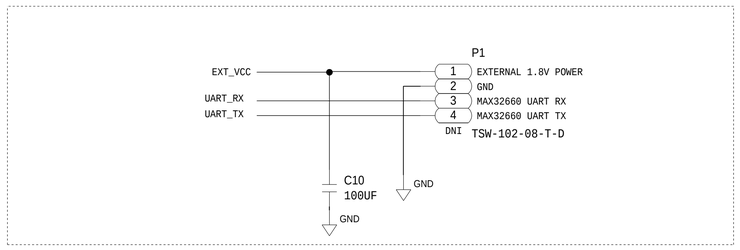

SMOKE DET. MODULE, TEMP SENSOR AND MCU

ANALOG DEVICES

SCHEMATIC

HW TYPE : Customer Evaluation Z
Product(s): ADPD188BI
: ADT7302

THIS DRAWING IS THE PROPERTY OF ANALOG DEVICES INC.
IT IS NOT TO BE REPRODUCED OR COPIED, IN WHOLE OR
IN PART, OR USED IN FURNISHING INFORMATION TO OTHERS,
OR FOR ANY OTHER PURPOSE DETRIMENTAL TO THE INTERESTS
OF ANALOG DEVICES.
THE EQUIPMENT SHOWN HEREON MAY BE PROTECTED BY PATENTS
OWNED OR CONTROLLED BY OWNED ANALOG DEVICES.

DESIGN VIEW	DRAWING NO.	REV
<DESIGN_VIEW>	02_068743	C

PTD ENGINEER	SIZE	SCALE	SHEET
A. UY	D	1:1	SHEET 2 OF 4

REVISIONS			
REV	DESCRIPTION	DATE	APPROVED

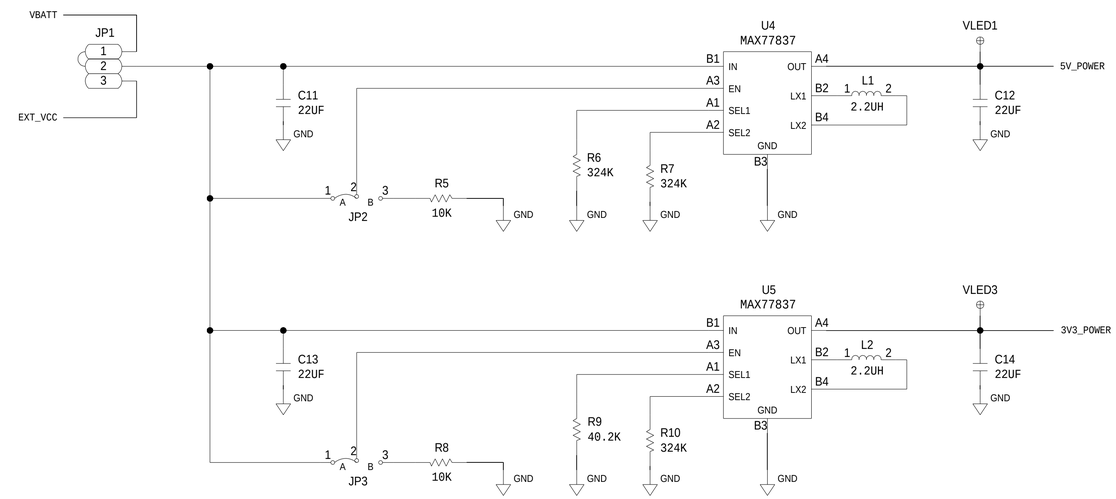

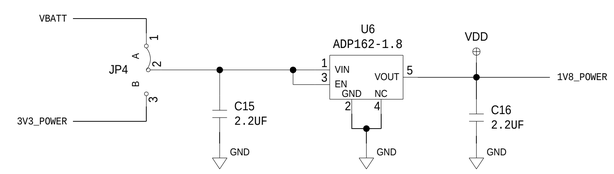

POWER REGULATION

ANALOG DEVICES

THIS DRAWING IS THE PROPERTY OF ANALOG DEVICES INC.
IT IS NOT TO BE REPRODUCED OR COPIED, IN WHOLE OR
IN PART, OR USED IN FURNISHING INFORMATION TO OTHERS,
OR FOR ANY OTHER PURPOSE DETRIMENTAL TO THE INTERESTS
OF ANALOG DEVICES.
THE EQUIPMENT SHOWN HEREON MAY BE PROTECTED BY PATENTS
OWNED OR CONTROLLED BY OWNED ANALOG DEVICES.

SCHEMATIC

HW TYPE : Customer Evaluation Z
Product(s): ADPD188BI
: ADT7302

DESIGN VIEW	DRAWING NO.	REV
<DESIGN_VIEW>	02_068743	C

PTD ENGINEER	SIZE	SCALE	SHEET 3 OF 4
A. UY	D	1:1	

REVISIONS			
REV	DESCRIPTION	DATE	APPROVED

CASTELLATED HOLES FOR EXTERNAL CONNECTIONS

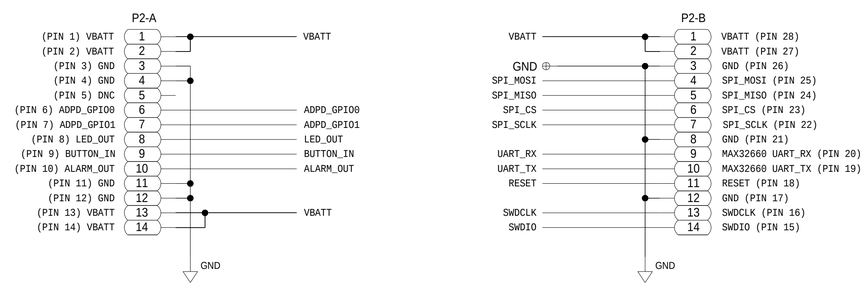

CASTELLATED HOLES PINOUT

ANALOG DEVICES

SCHEMATIC

HW TYPE : Customer Evaluation Z
Product(s): ADPD188BI
: ADT7302

THIS DRAWING IS THE PROPERTY OF ANALOG DEVICES INC.
IT IS NOT TO BE REPRODUCED OR COPIED, IN WHOLE OR
IN PART, OR USED IN FURNISHING INFORMATION TO OTHERS,
OR FOR ANY OTHER PURPOSE DETRIMENTAL TO THE INTERESTS
OF ANALOG DEVICES.
THE EQUIPMENT SHOWN HEREON MAY BE PROTECTED BY PATENTS
OWNED OR CONTROLLED BY OWNED ANALOG DEVICES.

DESIGN VIEW	DRAWING NO.	REV
<DESIGN_VIEW>	02_068743	C

PTD ENGINEER	SIZE	SCALE	SHEET 4 OF 4
A. UY	D	1:1	