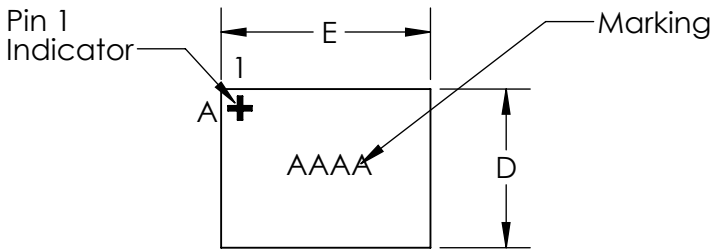

TOP VIEW

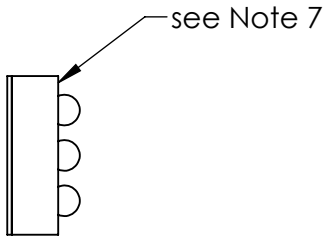

SIDE VIEW

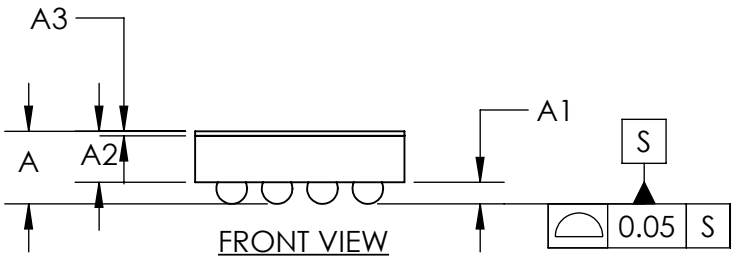

FRONT VIEW

COMMON DIMENSIONS	
A	0.64 ±0.05
A1	0.19 ±0.03
A2	0.45 REF
A3	0.040 BASIC
b	∅0.27 ±0.03
D	1.398 ±0.025
E	1.848 ±0.025
D1	0.80 BASIC
E1	1.20 BASIC
e	0.40 BASIC
SD	0.00 BASIC
SE	0.20 BASIC
DEPOPULATED BUMPS: NONE	

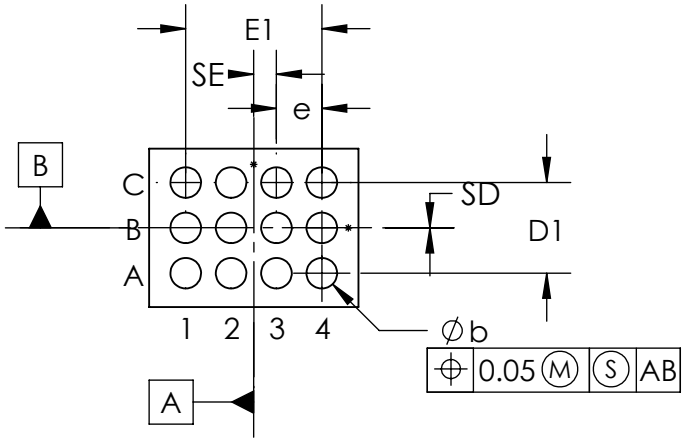

BOTTOM VIEW

NOTES:
1. Terminal pitch is defined by terminal center to center value.
2. Outer dimension is defined by center lines between scribe lines.
3. All dimensions in millimeter.
4. Marking shown is for package orientation reference only.
5. Tolerance is ± 0.02 unless specified otherwise.
6. All dimensions apply to PbFree (+) package codes only.
7. Front - side finish can be either Black or Clear.

maxim integrated™

TITLE
PACKAGE OUTLINE 12 BUMPS
WLP PKG. 0.4 mm PITCH, W121N1+1

APPROVAL	DOCUMENT CONTROL NO.	REV.	
	21-100495	B	1/1

- DRAWING NOT TO SCALE -