TOP VIEW

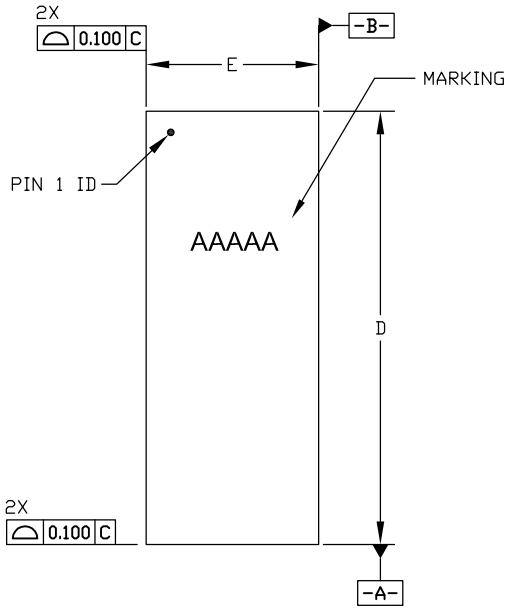

SIDE VIEW

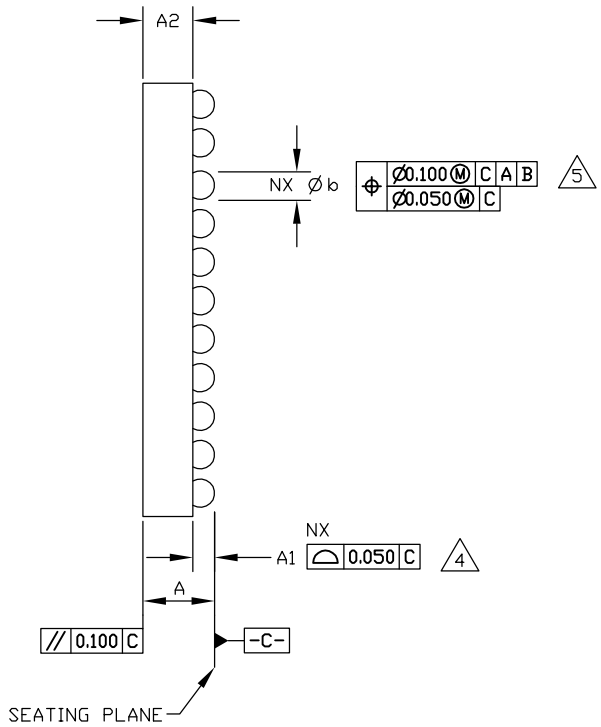

	MILLIMETERS			INCHES		
DIM	MIN	NOM	MAX	MIN	NOM	MAX
A	0.880	0.930	0.980	0.035	0.037	0.039
A1	0.250	0.280	0.310	0.010	0.011	0.012
A2	0.630	0.650	0.670	0.025	0.026	0.026
b	0.340	0.370	0.400	0.013	0.015	0.016
D	5.580	5.630	5.680	0.220	0.222	0.224
D1	4.550 BSC			0.180 BSC		
E	2.190	2.240	2.290	0.086	0.088	0.090
E1	1.500 BSC			0.059 BSC		
e	0.500 BSC			0.020 BSC		
MD	10 BALLS			10 BALLS		
ME	4 BALLS			4 BALLS		
N	43 BALLS			43 BALLS		

BOTTOM VIEW

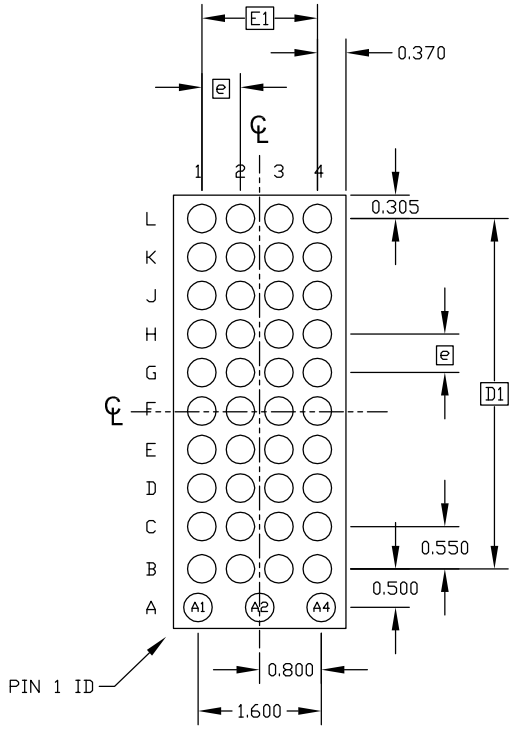

—DRAWING NOT TO SCALE—

NOTES:

1. ALL DIMENSIONS ARE IN MILLIMETERS.
2. MD IS THE BALL MATRIX SIZE IN THE "D" DIRECTION, ME IS THE BALL MATRIX SIZE IN THE "E" DIRECTION, AND N IS THE TOTAL NUMBER OF BALLS FOR THE MATRIX SIZE MD X ME AND DOES NOT INCLUDE BALLS FROM ANY DEPOPULATED LOCATIONS.
3. DIMENSIONING AND TOLERANCING CONFORM TO ASME Y14.5M.-2009.
4. PRIMARY DATUM C (SEATING PLANE) IS DEFINED BY THE CROWNS OF THE SOLDER BALLS.
5. DIMENSION b IS MEASURED AT THE MAXIMUM SOLDER BALL DIAMETER IN A PLANE PARALLEL TO DATUM C.
6. MARKING SHOWN IS FOR PKG. ORIENTATION PURPOSE ONLY.
7. MATERIAL MUST COMPLY WITH BANNED AND RESTRICTED SUBSTANCES SPEC #10-0131.
8. ALL DIMENSIONS APPLY TO PbFREE (+) PKG. CODES ONLY.

maxim integrated™

TITLE:
PACKAGE OUTLINE, 43 BALLS
WLCSP, 0.50mm PITCH, C432A5+1

APPROVAL	DOCUMENT CONTROL NO.	REV.	
	21-0940	A	1/1