TOP VIEW

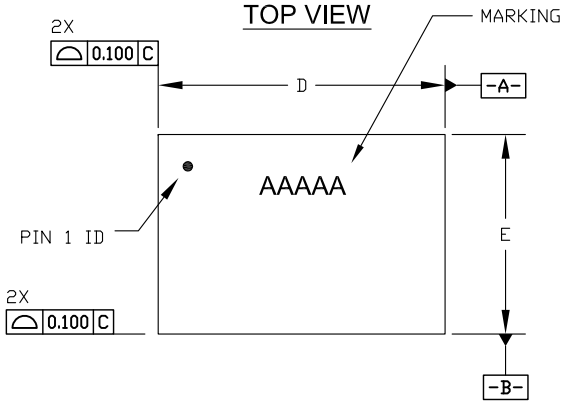

SIDE VIEW

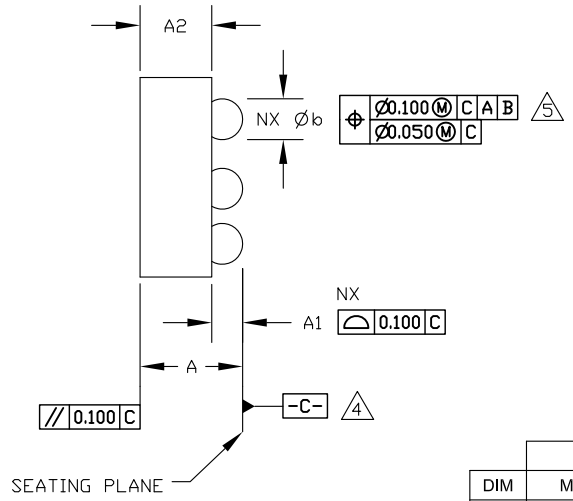

BOTTOM VIEW

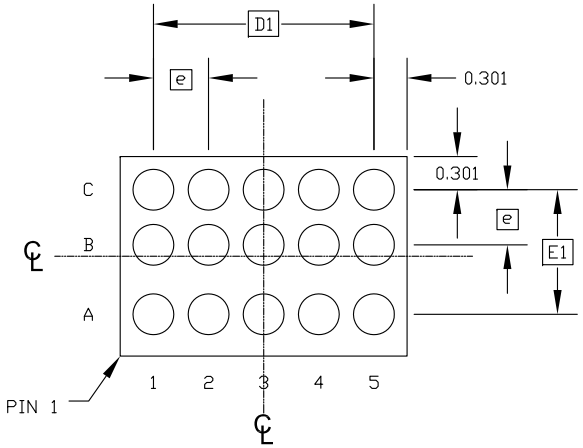

	MILLIMETERS			INCHES		
DIM	MIN	NOM	MAX	MIN	NOM	MAX
A	0.880	0.930	0.980	.035	.037	.039
A1	0.250	0.280	0.310	.010	.011	.012
A2	0.630	0.650	0.670	.025	.026	.027
b	0.340	0.370	0.400	.013	.015	.016
D	2.552	2.602	2.652	.100	.102	.104
D1	2.000 BSC			.079 BSC		
E	1.760	1.810	1.860	.069	.071	.073
E1	1.130 BSC			.044 BSC		
e	0.500 BSC			.020 BSC		
MD	-	-	5 BALLS	-	-	5 BALLS
ME	-	-	3 BALLS	-	-	3 BALLS
N	15 BALLS			15 BALLS		

NOTES:

1. ALL DIMENSIONS ARE IN MILLIMETERS.
2. MD IS THE BALL MATRIX SIZE IN THE "D" DIRECTION, ME IS THE BALL MATRIX SIZE IN THE "E" DIRECTION, AND N IS THE TOTAL NUMBER OF BALLS FOR THE MATRIX SIZE MD X ME AND DOES NOT INCLUDE BALLS FROM ANY DEPOPULATED LOCATIONS.
3. DIMENSIONING AND TOLERANCING CONFORM TO ASME Y14.5M.-2009.
4. PRIMARY DATUM C (SEATING PLANE) IS DEFINED BY THE CROWNS OF THE SOLDER BALLS.
5. DIMENSION b IS MEASURED AT THE MAXIMUM SOLDER BALL DIAMETER IN A PLANE PARALLEL TO DATUM C.
6. THERE SHALL BE A MINIMUM CLEARANCE OF 0.10MM BETWEEN THE EDGE OF THE BUMP AND THE BODY EDGE.
7. MARKING SHOWN IS FOR PKG. ORIENTATION PURPOSE ONLY.
8. MATERIAL MUST COMPLY WITH BANNED AND RESTRICTED SUBSTANCES SPEC #10-0131.
9. ALL DIMENSIONS APPLY TO BOTH LEADED(-) AND PbFREE (+) PKG. CODES.

—DRAWING NOT TO SCALE—

maxim integrated™

TITLE:
PACKAGE OUTLINE, 15 BALLS
WLCSP, 0.50mm PITCH, C152E1+1

APPROVAL	DOCUMENT CONTROL NO.	REV.	
	21-0908	A	1/1