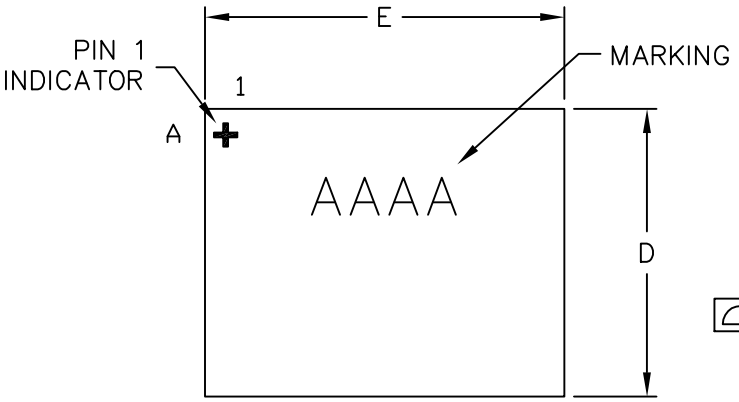

TOP VIEW

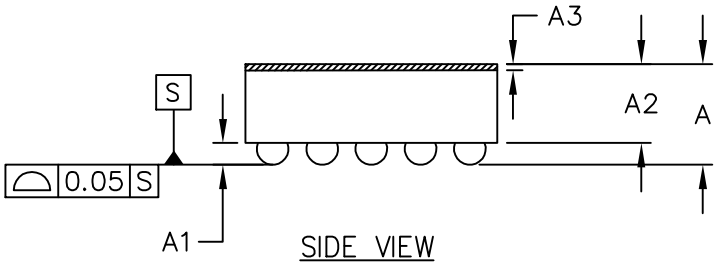

SIDE VIEW

COMMON DIMENSIONS	
A	0.64±0.05
A1	0.24±0.03
A2	0.40 REF
A3	0.025–0.050 BASIC
b	ø0.31±0.03
D1	1.50 BASIC
E1	2.00 BASIC
e	0.50 BASIC
SD	0.25 BASIC
SE	0.00 BASIC

PKG. CODE	E		D		DEPOPULATED BUMPS
	MIN	MAX	MIN	MAX	
R202A2+1	2.49	2.62	1.98	2.11	NONE

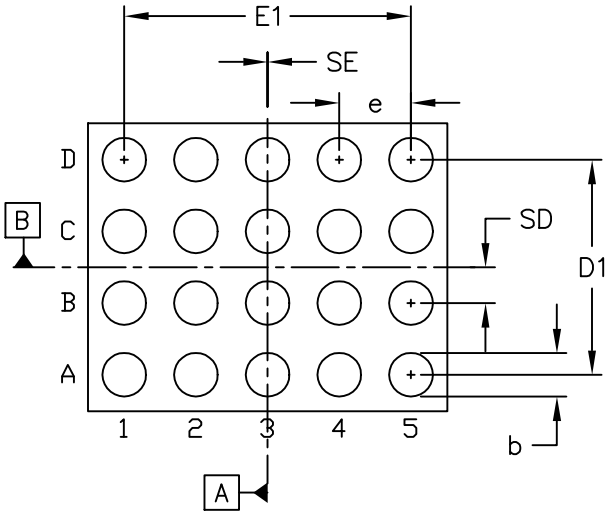

BOTTOM VIEW

NOTES:
1. Terminal pitch is defined by terminal center to center value.
2. Outer dimension is defined by center lines between scribe lines.
3. All dimensions in millimeters.
4. Marking shown is for package orientation reference only.
5. Tolerance is ± 0.02mm unless specified otherwise.
6. All dimensions apply to PbFree (+) package codes only.

–DRAWING NOT TO SCALE–

MAXIM

TITLE:
PACKAGE OUTLINE, 20 BUMPS,
UCSP (R) PKG. 0.5mm PITCH

APPROVAL	DOCUMENT CONTROL NO.	REV.	
TIE WANG 01-09-09	21–0229	B	1/1