ANALOG DEVICES

4-Lead Small Outline Transistor Package [SOT-143]
(RA-4)
Dimensions shown in millimeters

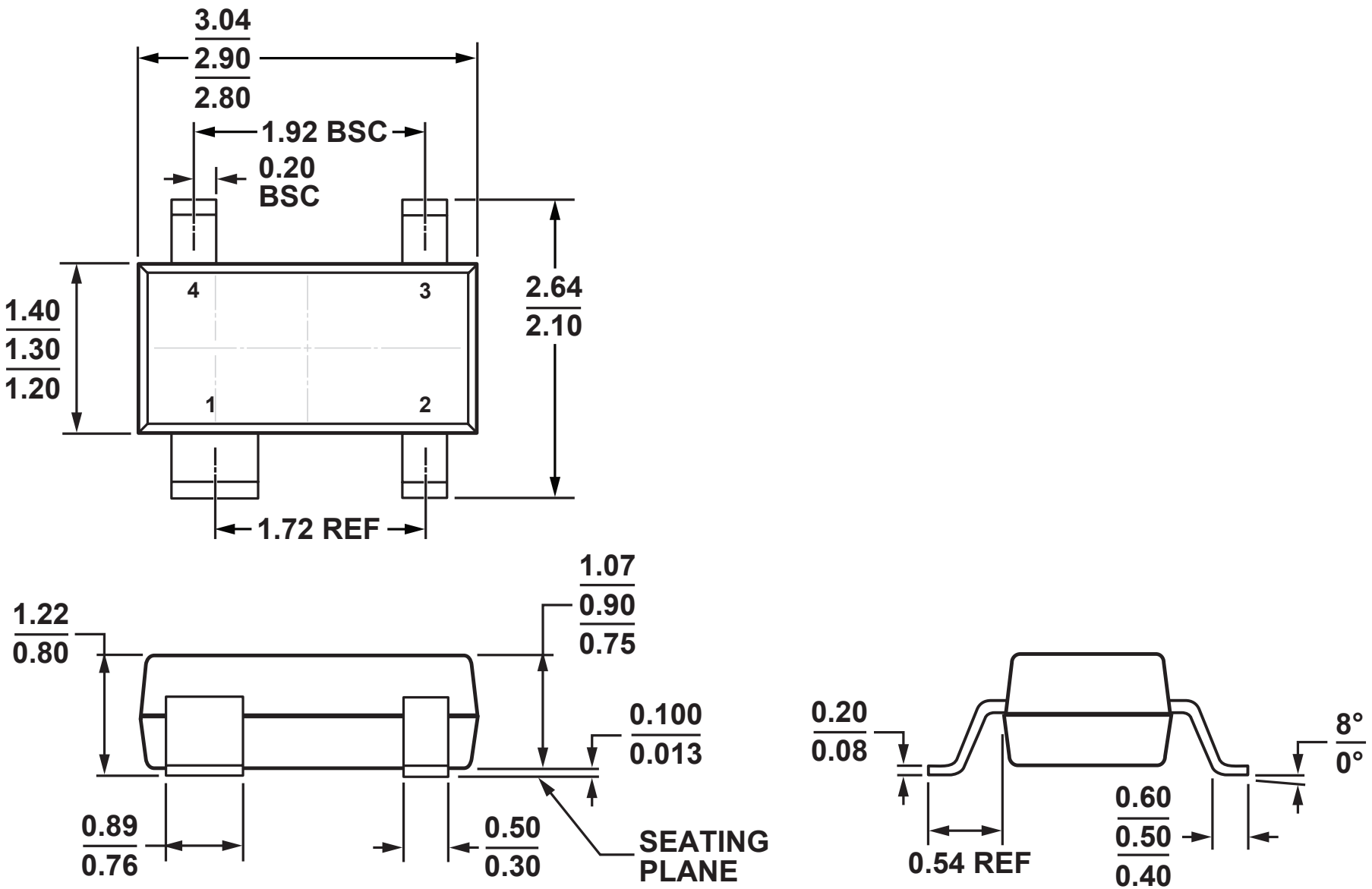

COMPLIANT TO JEDEC STANDARDS TO-253-AA

03-13-2012-B