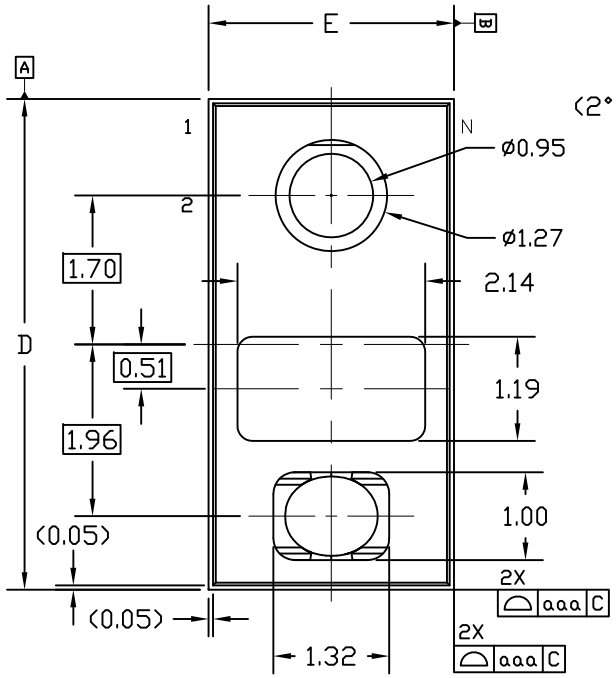

TOP VIEW

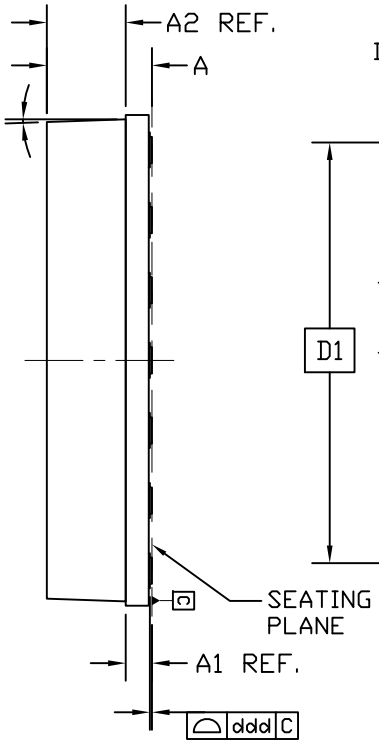

SIDE VIEW

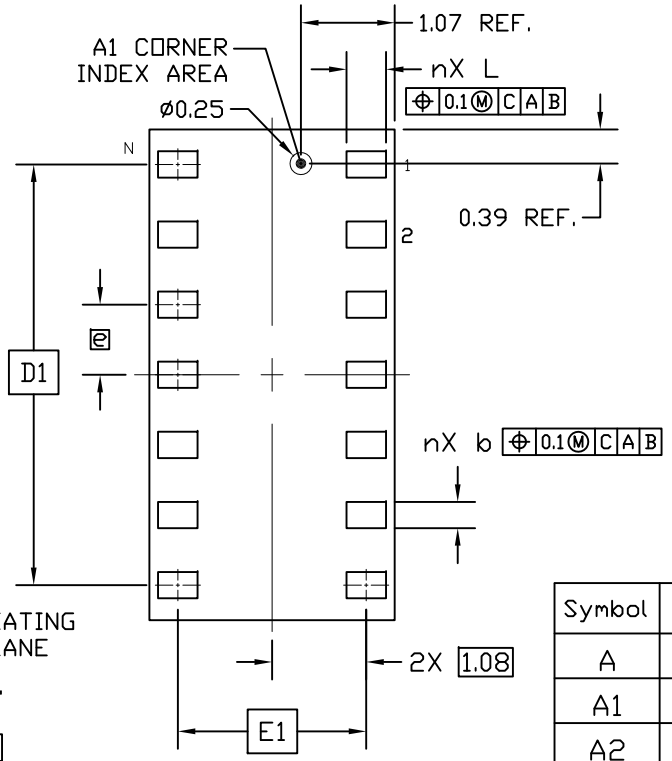

BOTTOM VIEW

Symbol	MIN	NOM	MAX
A	1.1	1.2	1.3
A1	0.3 REF.		
A2	0.9 REF.		
b	0.25	0.30	0.35
D	5.5	5.6	5.7
D1	4.8 BSC		
E	2.7	2.8	2.9
E1	2.15 BSC		
e	0.8 BSC		
L	0.40	0.45	0.50
N	14		
aaa	0.1		
ddd	0.08		

NOTES:

1. ALL DIMENSIONS ARE IN MILLIMETERS. ANGLES ARE IN DEGREES.
2. DIMENSIONING & TOLERANCING CONFORM TO ASME Y14.5M-1994.
3. N IS THE TOTAL NUMBER OF TERMINALS.
4. MATERIAL MUST BE COMPLIANT WITH MAXIM SPECIFICATION 10-0131 FOR SUBSTANCE CONTENT, MUST BE Eu ROHS COMPLIANT WITHOUT EXEMPTION AND PB-FREE.
5. ALL DIMENSIONS APPLY TO Pb FREE (+) PARTS.
6. PACKAGE CODE: F142D5+2, F142D5+3

-DRAWING NOT TO SCALE-

maxim integrated™

TITLE:
PACKAGE OUTLINE, 14L
OLGA, 2.8x5.6x1.2mm

APPROVAL	DOCUMENT CONTROL NO.	REV.	
S. Gaddamraja 02/28/2014	21-0880	C	1/1