ANALOG DEVICES

20-Lead Module with Connector Interface.
(ML-20-2)
Dimensions shown in millimeters.

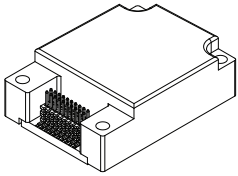

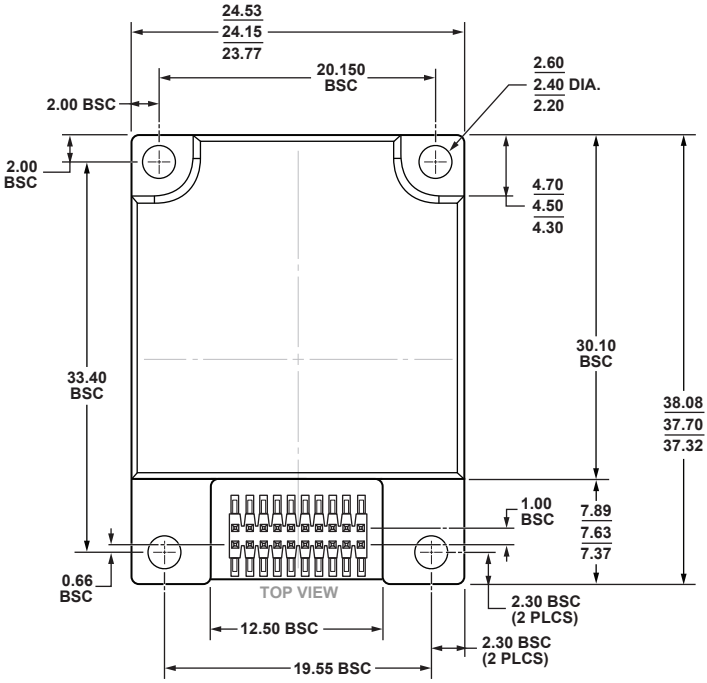

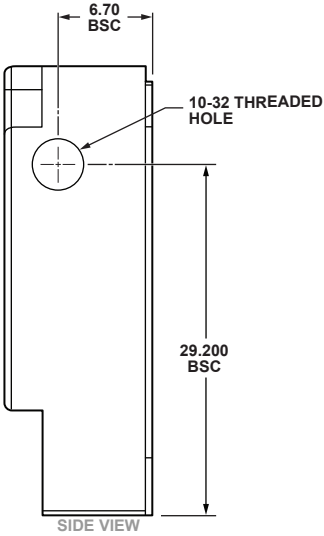

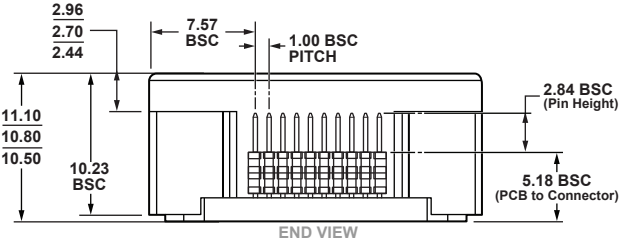

03-14-2013-D