ANALOG DEVICES

24-Lead Module with Connector Interface [MODULE]
(ML-24-9)
Dimensions shown in millimeters.

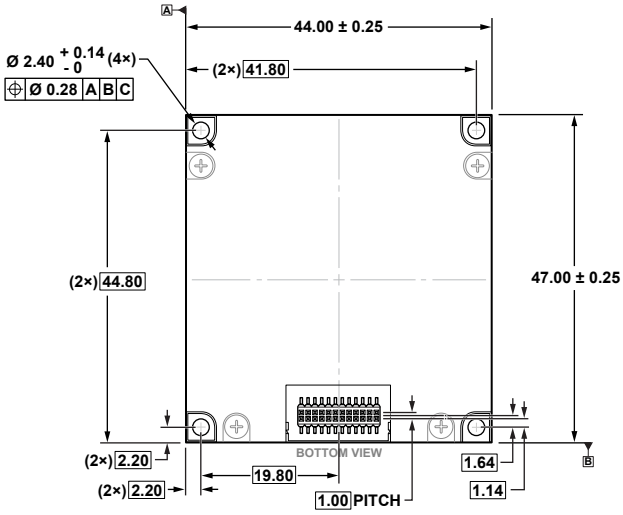

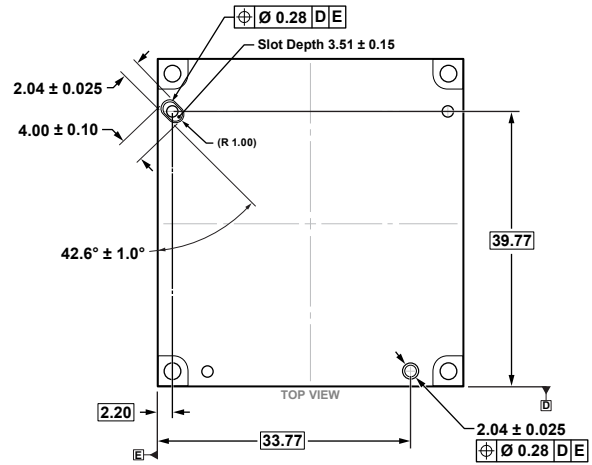

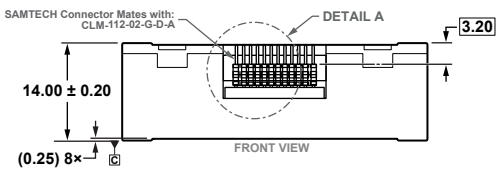

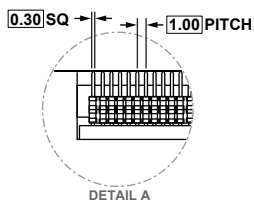

UNLESS OTHERWISE SPECIFIED TOLERNACES ARE:

X.XX = ± 0.15
Degrees = ± 1.0°

12-10-2020-C