ANALOG DEVICES | ADI Power by Linear™

LQFN Package
32(30)-Lead (6mm × 4mm × 0.94mm)
(Reference LTC DWG # 05-08-1558 Rev A)

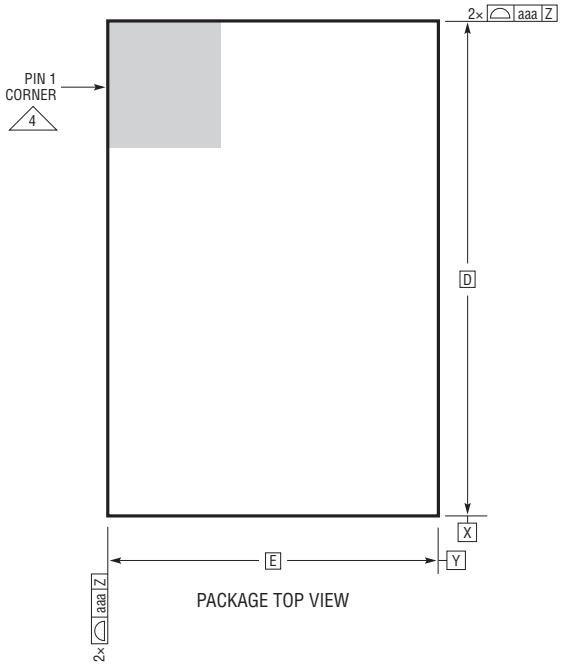

PACKAGE TOP VIEW

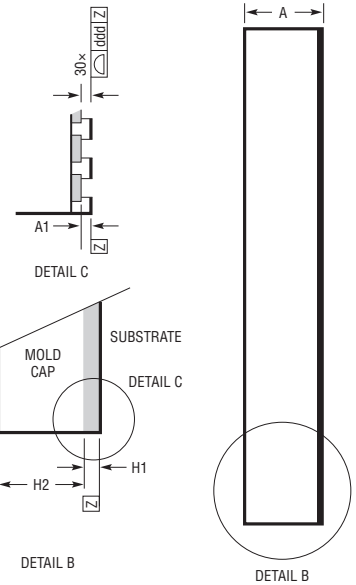

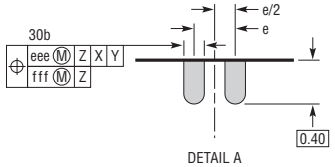

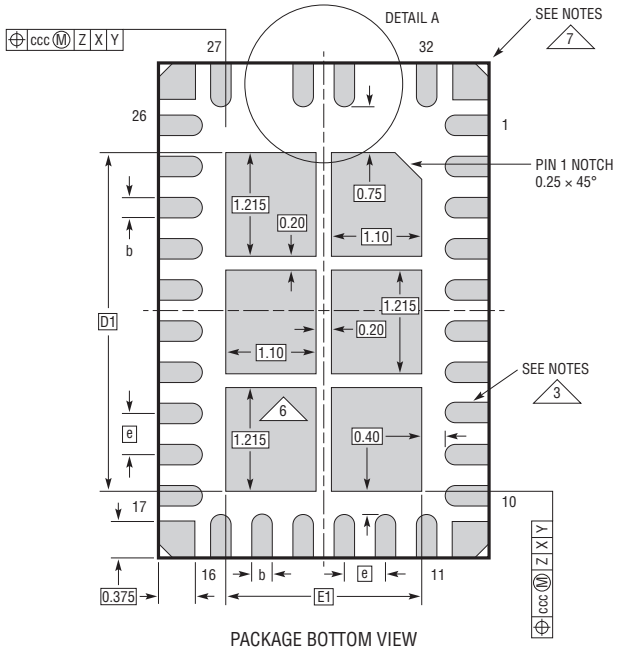

PACKAGE BOTTOM VIEW

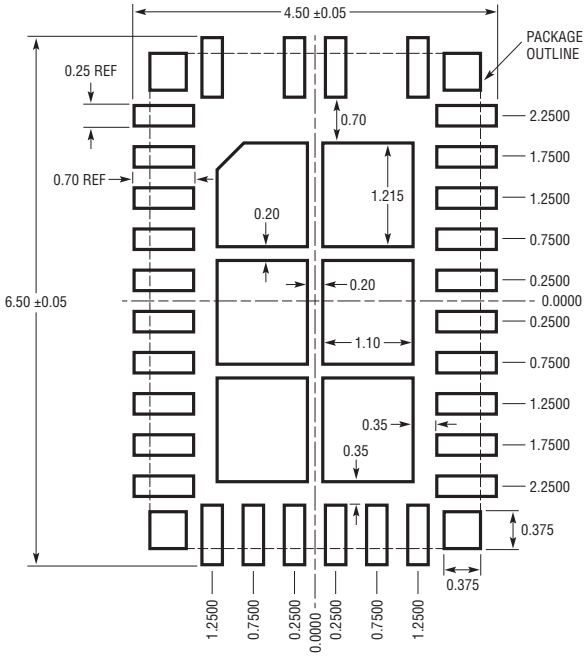

SUGGESTED PCB LAYOUT
TOP VIEW

DIMENSIONS				
SYMBOL	MIN	NOM	MAX	NOTES
A	0.85	0.94	1.03	
A1			0.03	
b	0.22	0.25	0.28	
D		6.00		
E		4.00		
e		0.50		
D1		4.045		
E1		2.40		
H1		0.24 REF		SUBSTRATE THK
H2		0.70 REF		MOLD CAP HT
aaa			0.10	
bbb			0.10	
ccc			0.08	
ddd			0.10	
eee			0.15	
fff			0.08	

NOTES:
1. DIMENSIONING AND TOLERANCING PER ASME Y14.5M-1994
2. ALL DIMENSIONS ARE IN MILLIMETERS
3. METAL FEATURES UNDER THE SOLDER MASK OPENING NOT SHOWN SO AS NOT TO OBSCURE THESE TERMINALS AND HEAT FEATURES
4. DETAILS OF PIN 1 IDENTIFIER ARE OPTIONAL, BUT MUST BE LOCATED WITHIN THE ZONE INDICATED. THE PIN 1 IDENTIFIER MAY BE EITHER A MOLD OR MARKED FEATURE
5. PRIMARY DATUM -Z- IS SEATING PLANE
6. THE EXPOSED HEAT FEATURE IS SEGMENTED AND ARRANGED IN A MATRIX FORMAT. IT MAY HAVE OPTIONAL CORNER RADII ON EACH SEGMENT
7. CORNER SUPPORT PAD CHAMFER IS OPTIONAL

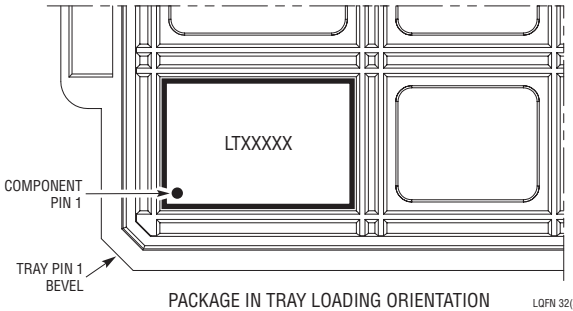

PACKAGE IN TRAY LOADING ORIENTATION

LQFN 32(30) 0520 REV A