ANALOG DEVICES

80-Lead Low Profile Quad Flat Package, PowerQuad 2 [LQFP_PQ2]
(SQ-80-2)
Dimensions shown in millimeters

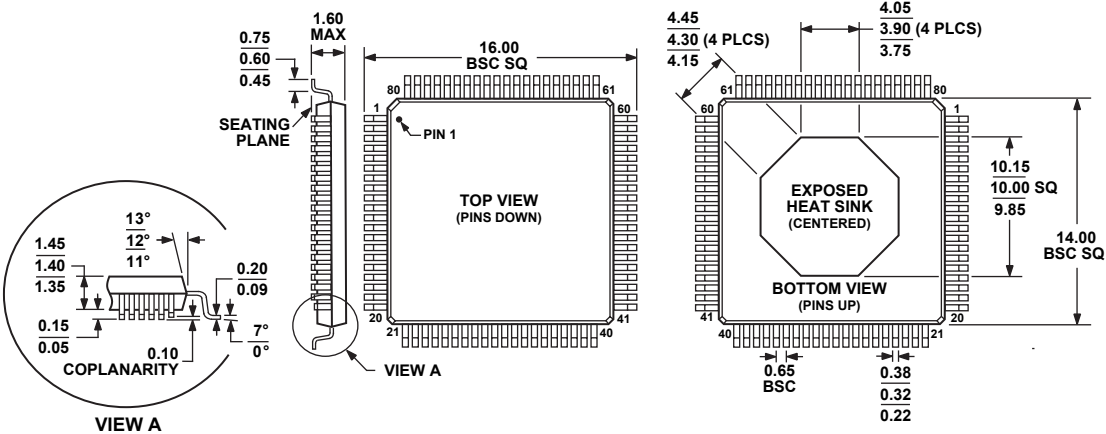

COMPLIANT TO JEDEC STANDARDS MS-026-BEC-HD

121905-0