ANALOG DEVICES

32-Lead Lead Frame Chip Scale Package [LFCSP_VQ]
5 x 5 mm Body, Very Thin Quad
(CP-32-19)
Dimensions shown in millimeters

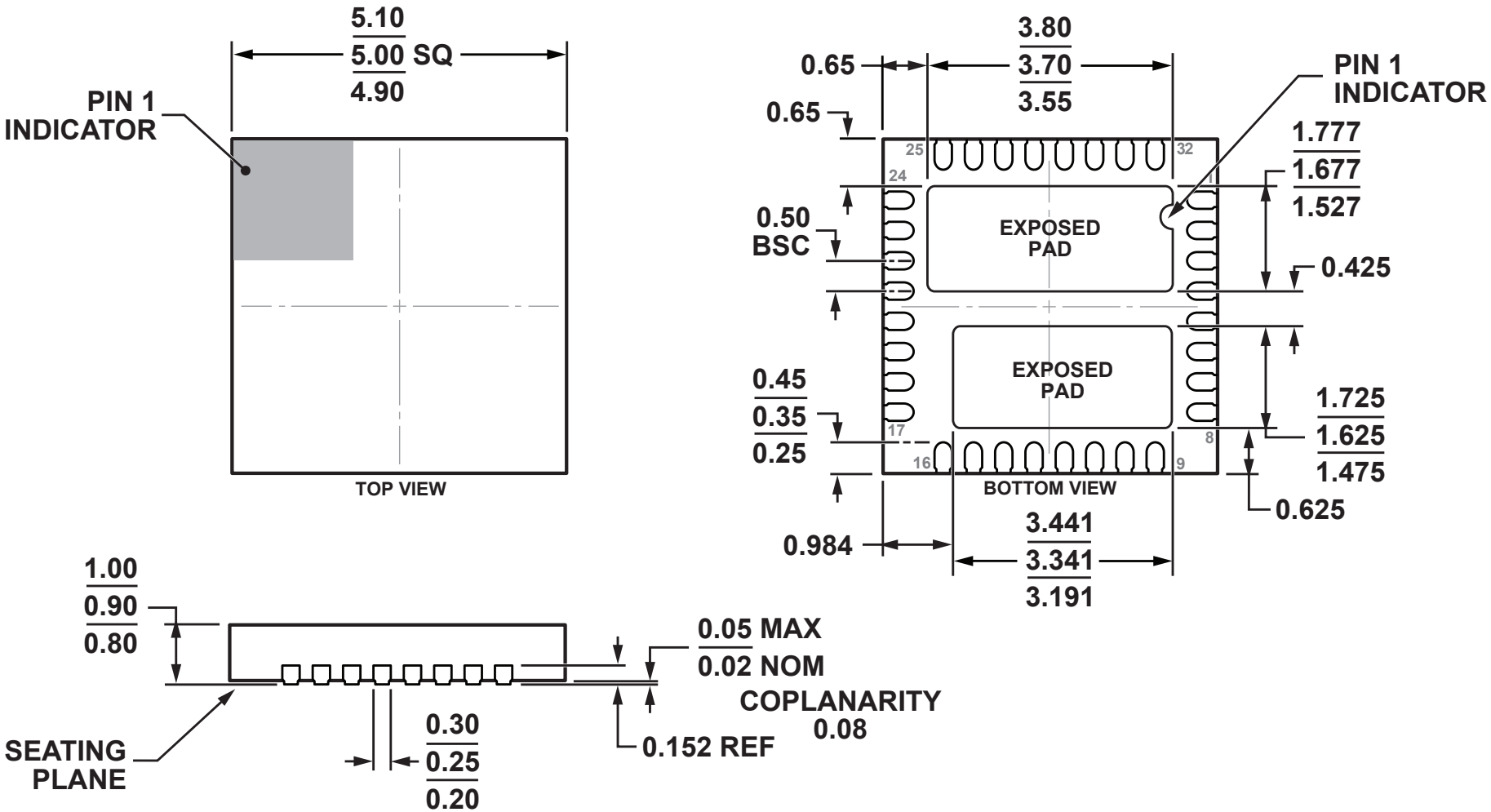

COMPLIANT TO JEDEC STANDARDS MO-220-VHHD

12-12-2012-A