ANALOG DEVICES

16-Terminal Ceramic Leadless Chip Carrier with Heat Sink [LCC_HS]
(EH-16-1)
Dimensions shown in millimeters.

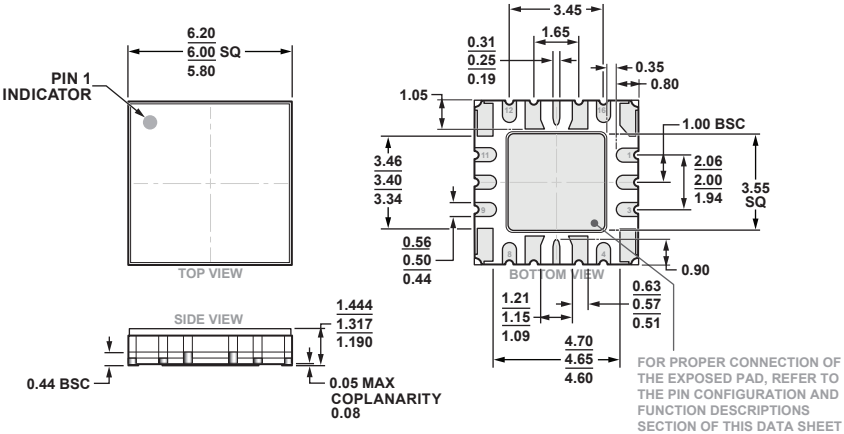

PKG-004903

09-09-2021-C
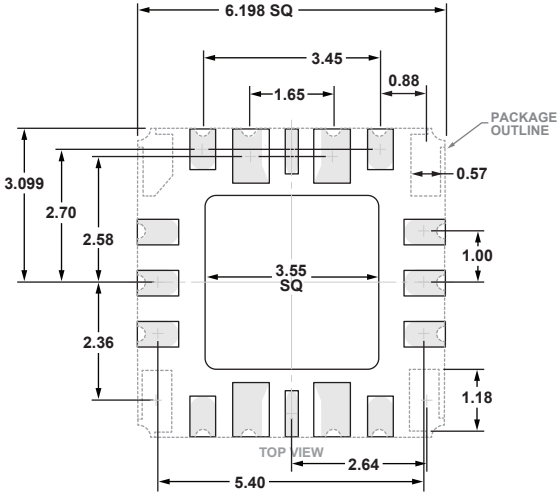
RECOMMENDED SOLDER PAD LAYOUT
APPLY SOLDER MASK TO AREAS THAT ARE NOT SOLDERED
DIMENSIONS SHOWN IN MILLIMETERS