ANALOG DEVICES
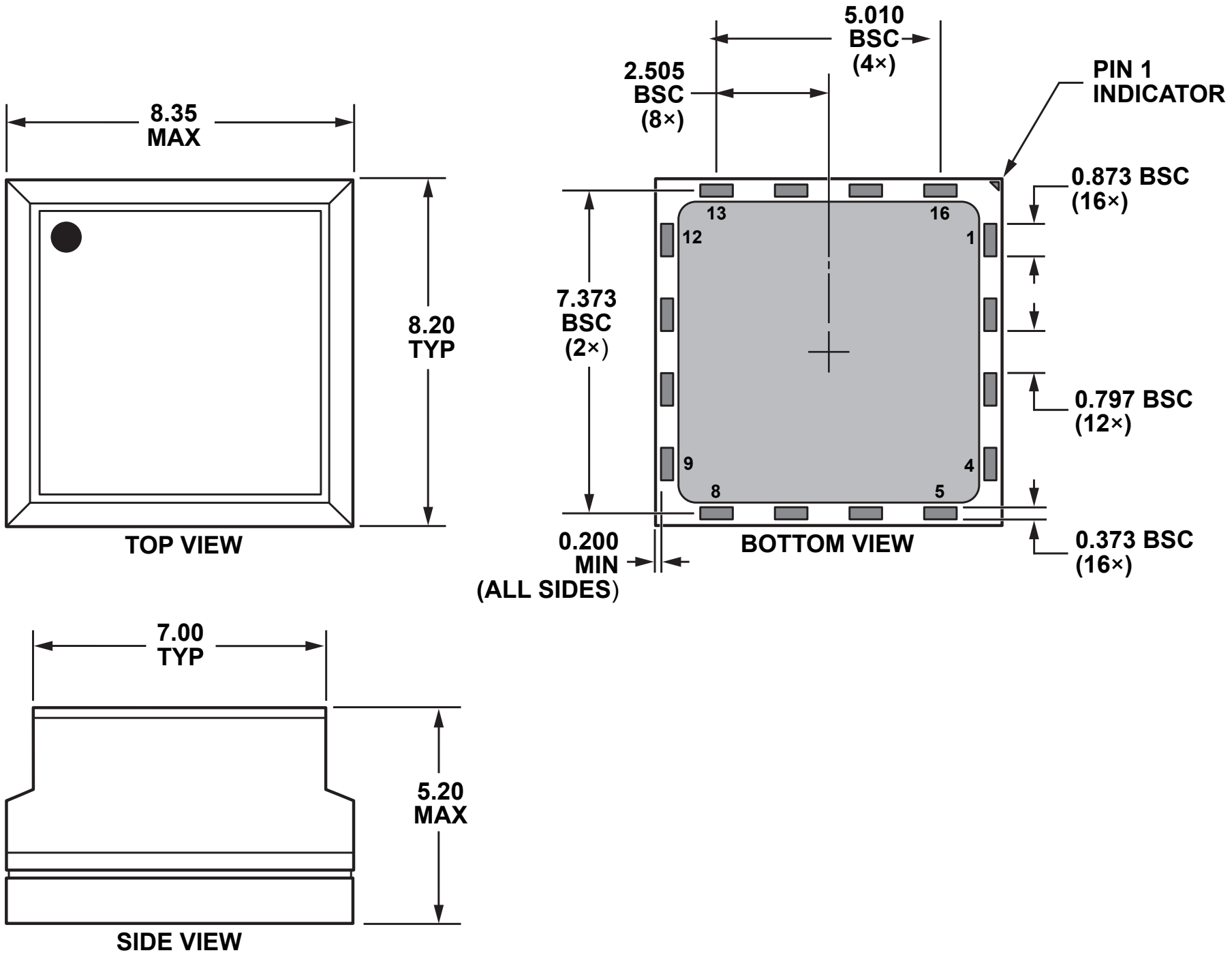
16-Terminal Stacked Land Grid Array [LGA]
(CC-16-1)
Dimensions shown in millimeters