ANALOG DEVICES

80-Lead Thin Quad Flat Package, Exposed Pad [TQFP_EP]
(SV-80-2)
Dimensions shown in millimeters

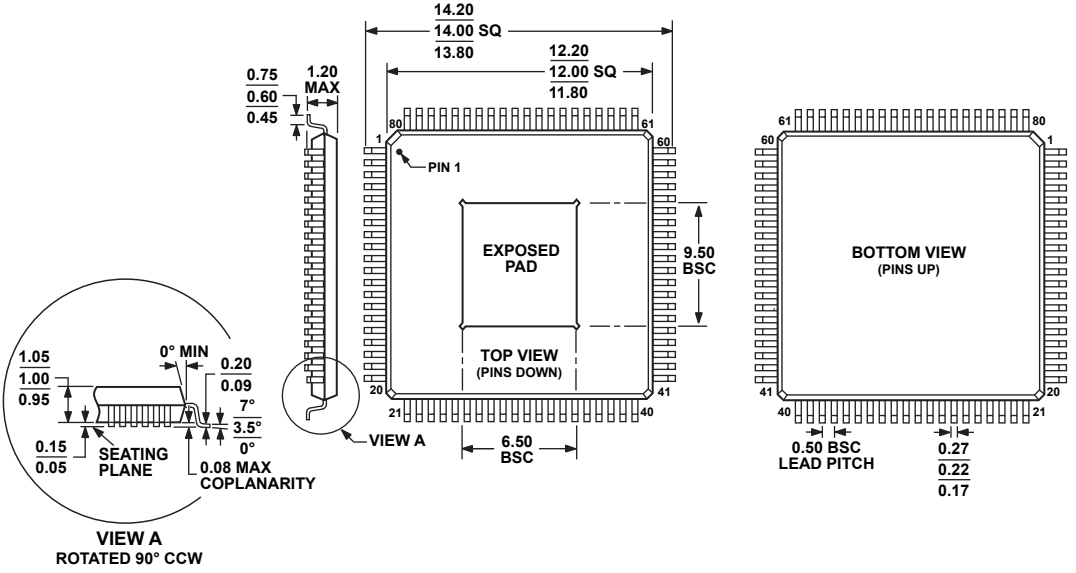

COMPLIANT TO JEDEC STANDARDS MS-026-ADD-HU