ANALOG DEVICES

# 84-Ball Chip Scale Package Ball Grid Array [CSP_BGA]
## (BC-84-1)
## Dimensions shown in millimeters

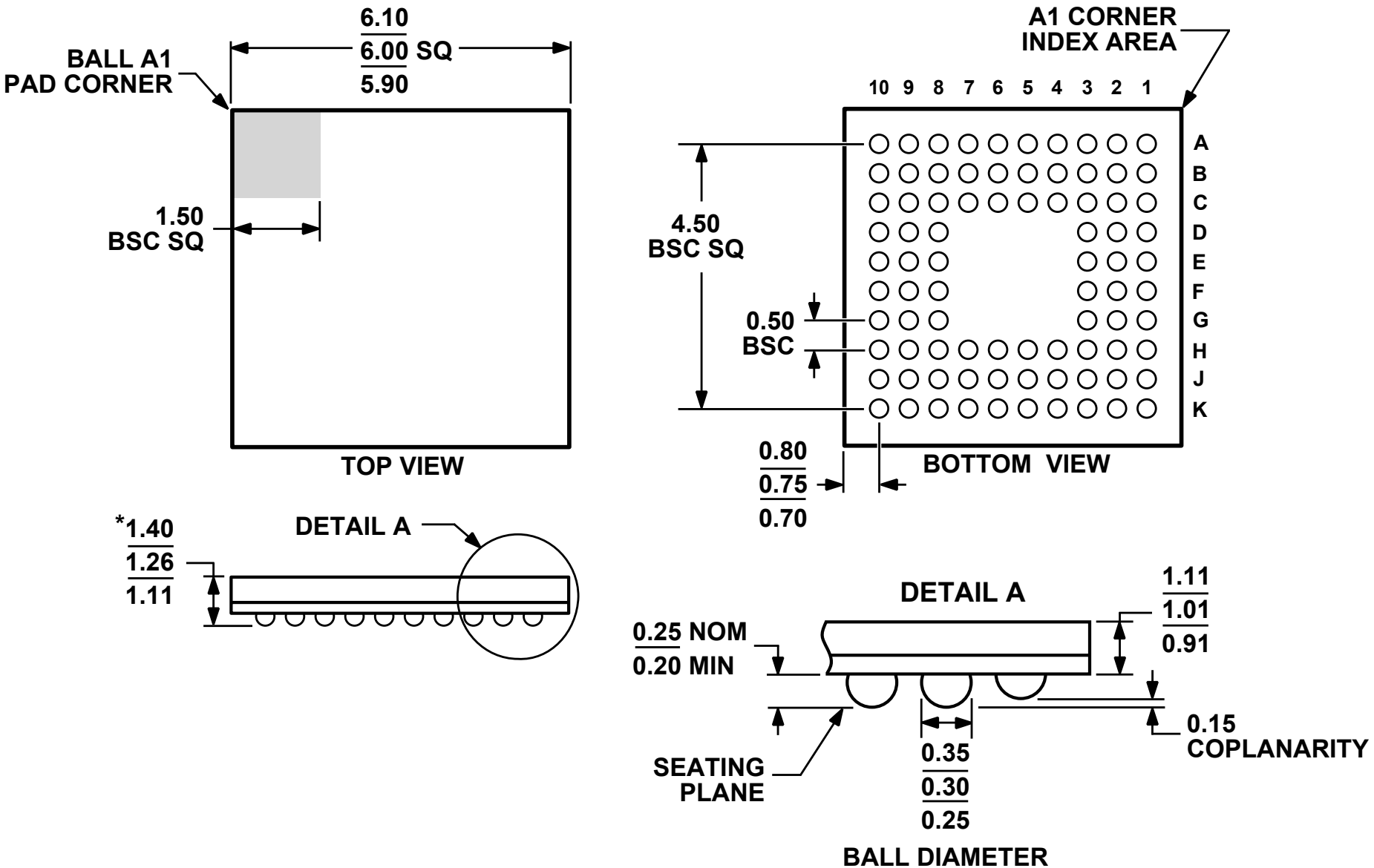


*COMPLIANT WITH JEDEC STANDARDS MO-195-BC
WITH THE EXCEPTION TO PACKAGE HEIGHT.

033106-A