RECOMMENDED LAND PATTERN

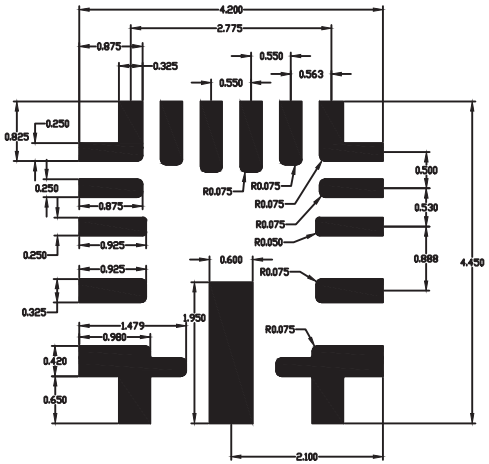

PACKAGE OVERLAY

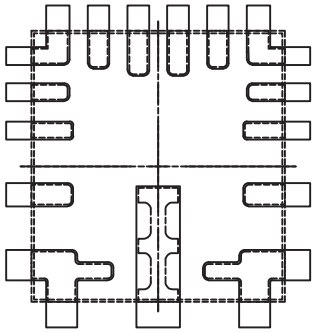

NOTES:

1. REFERENCE PKG. OUTLINE: 21-100732
2. LAND PATTERN COMPLIES TO: IPC7351A.
3. TOLERANCE: +/- 0.02 MM.
4. ALL DIMENSIONS APPLY TO LEADED, PbFREE PACKAGES.
5. ALL DIMENSIONS IN MM.

—DRAWING NOT TO SCALE—

This document (including dimensions, notes & specs) is a recommendaton based on typical circuit board manufacturing parameters. Since land pattern design depend on many factors unknown to Analog Devices Inc. (eg. user's board manufacturing specs), user must determine suitability for use. This document is subject to change without notice.
Contact technical support at http://www.maxim-ic.com/support for further questions.

ANALOG DEVICES

TITLE:
PACKAGE LAND PATTERN,
[F153A3FY+3] FC2QFN

APPROVAL	DOCUMENT CONTROL NO.	REV.	
HAN CHIEN	90-100253	A	1/1