RECOMMENDED LAND PATTERN

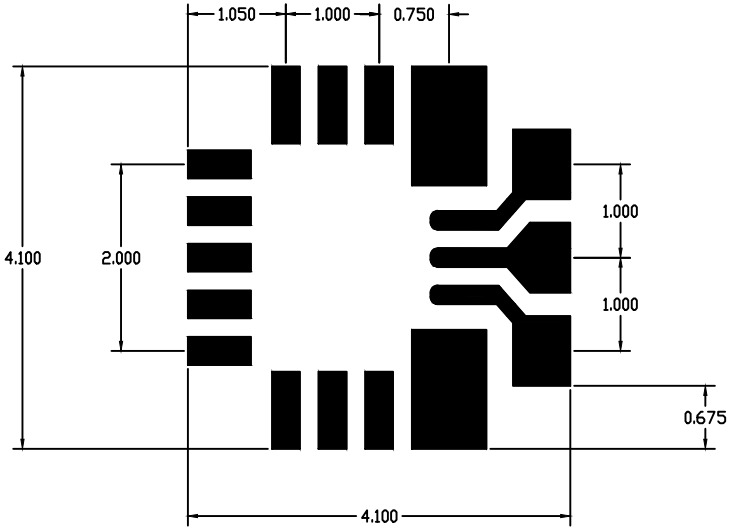

PACKAGE OVERLAY

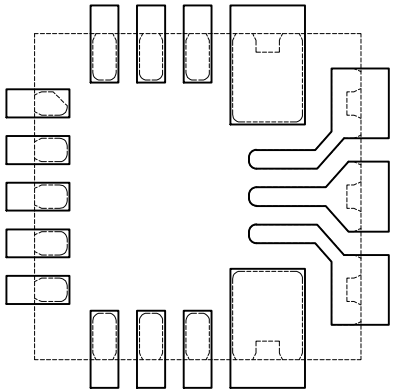

PAD DETAILS

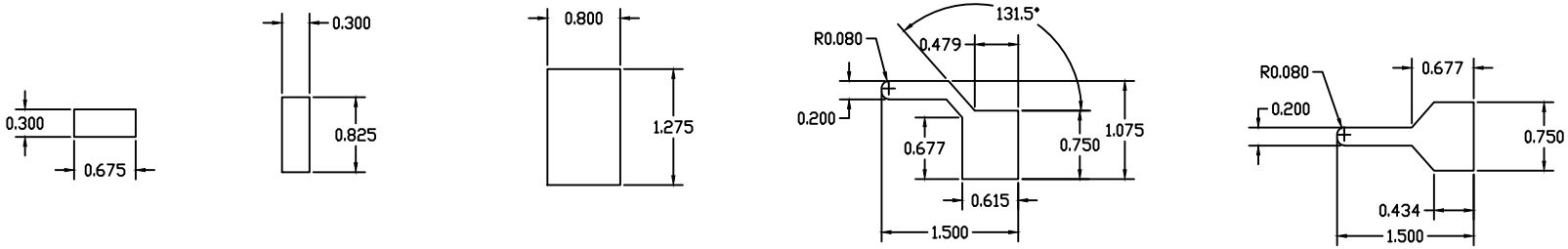

NOTES:

1. REFERENCE PKG. OUTLINE: 21-100410
2. LAND PATTERN COMPLIES TO: IPC7351A.
3. TOLERANCE: +/- 0.02 MM.
4. ALL DIMENSIONS APPLY TO LEADED, PbFREE PACKAGES.
5. ALL DIMENSIONS IN MM.

—DRAWING NOT TO SCALE—

This document (including dimensions, notes & specs) is a recommendaton based on typical circuit board manufacturing parameters. Since land pattern design depend on many factors unknown to Maxim (eg. user's board manufacturing specs), user must determine suitability for use.
This document is subject to change without notice.
Contact technical support at http://www.maxim-ic.com/support for further questions.

maxim integrated™

TITLE:
PACKAGE LAND PATTERN,
[F163A3F+1] FC2QFN

APPROVAL	DOCUMENT CONTROL NO.	REV.	
	90-100141	B	1/1