BLOCK DIAGRAM OF THE AD9081
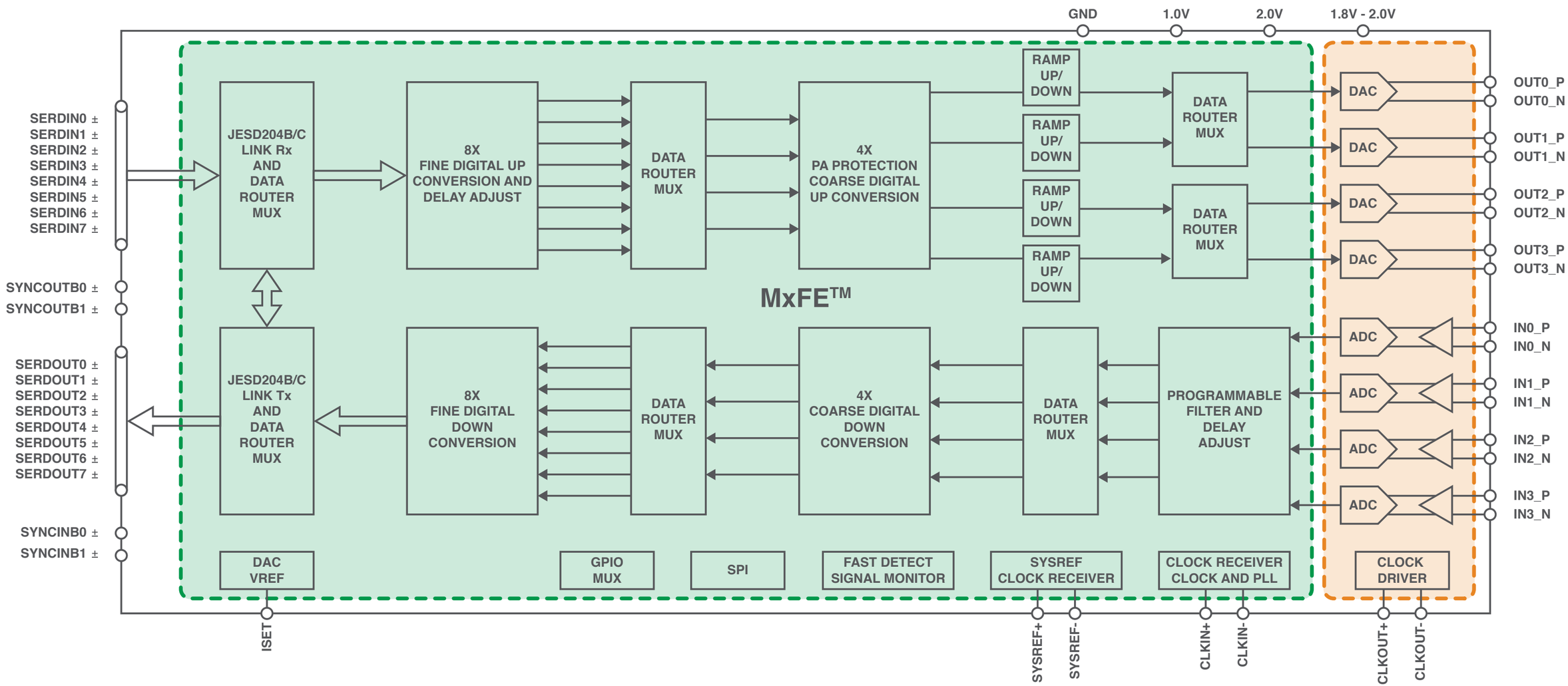
ANALOG DEVICES
AHEAD OF WHAT'S POSSIBLE™