

ADI Semiconductor Automatic Test Equipment Solution

Application Introduction

Test for semiconductor IC components can usually be divided into CP (chip probe) at the wafer level and the final package test (FT). The main difference between these two is that the CP is a functional test for the die before packaging, while the FT is an IC specification test after packaging. The purpose of the die test is mainly to avoid problems found during the FT test and an even heavier burden to cost while improving product passed yield. The integrated circuit test (IC test) is implemented mainly to distinguish qualified ICs from unqualified ones and ensure the final product specification, quality, and reliability. With the rapid development of integrated circuits, the scale of the semiconductor test market has become larger and larger. The growing test market has led to higher requirements for circuit quality and reliability. The difficulty for IC test methods has also increased. Has led to higher requirements for circuit quality and reliability. The difficulty for IC test methods has also increased. The most critical indicator that must be addressed during test is channel density. This is because the higher the channel density, the more ICs can be tested within a single test, reducing the overall cost significantly. The architecture for semiconductor automated test equipment is shown in Figure 1. The entire ATE system test platform, ADI's most critical and outstanding ATE pin electronics (PE), together with external parametric measurement units (PMUs or SMUs) or DPS (device power supplies), will convert all measurement and monitoring parameters into digital signals to the back-end controller for processing, through test switching on the external switch and a high precision, multichannel ADC. ADI's µModule® technology is crucially important, as it allows the entire ATE test system to meet the channel density design requirements and achieve the goal of reducing system test costs.

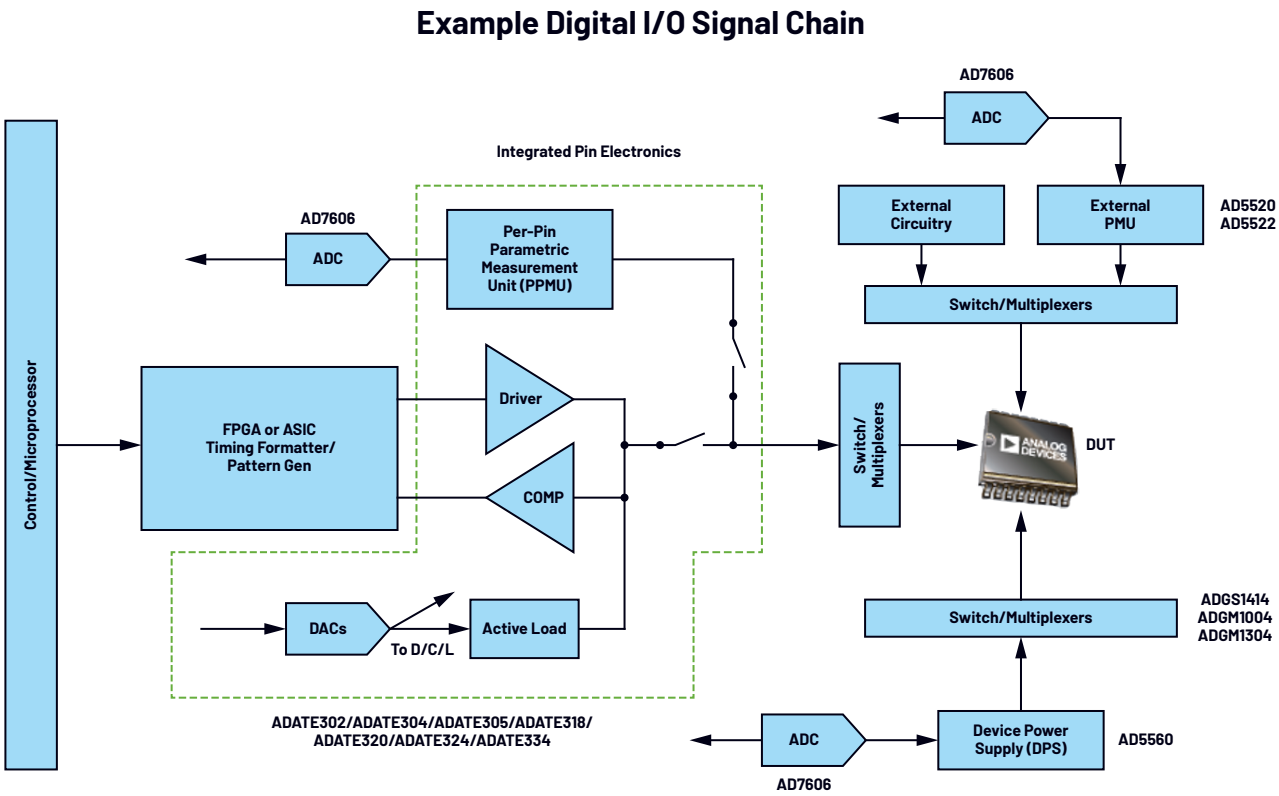

Figure 1. Example of a digital I/O signal chain.

ATE Pin Driver (PE)

ADI provides critical IC test applications with the best in industry ATE pin electronics, also known as pin drivers, as shown in Figure 2. These high performance, integrated pin electronics/pin drivers provide critical test application solutions in a single package, including digital drive and comparison functions, active load, and per-pin parametric measurement units that are controlled via level-setting DACs. ADI's integrated pin electronics/pin drivers such as ADATE305/ADATE318/ADATE324/ADATE334 are widely recognized due to their excellent performance. They support speeds of up to several Gbps with high accuracy and low power consumption, and are manufactured using ADI's exclusive manufacturing process. They provide outstanding solutions for cost-sensitive and unique test applications, coupled with our µModule technology for an optimal digital board test solution, as shown in Figure 3.

ADATE3xx Block Diagram and Typical Key Features

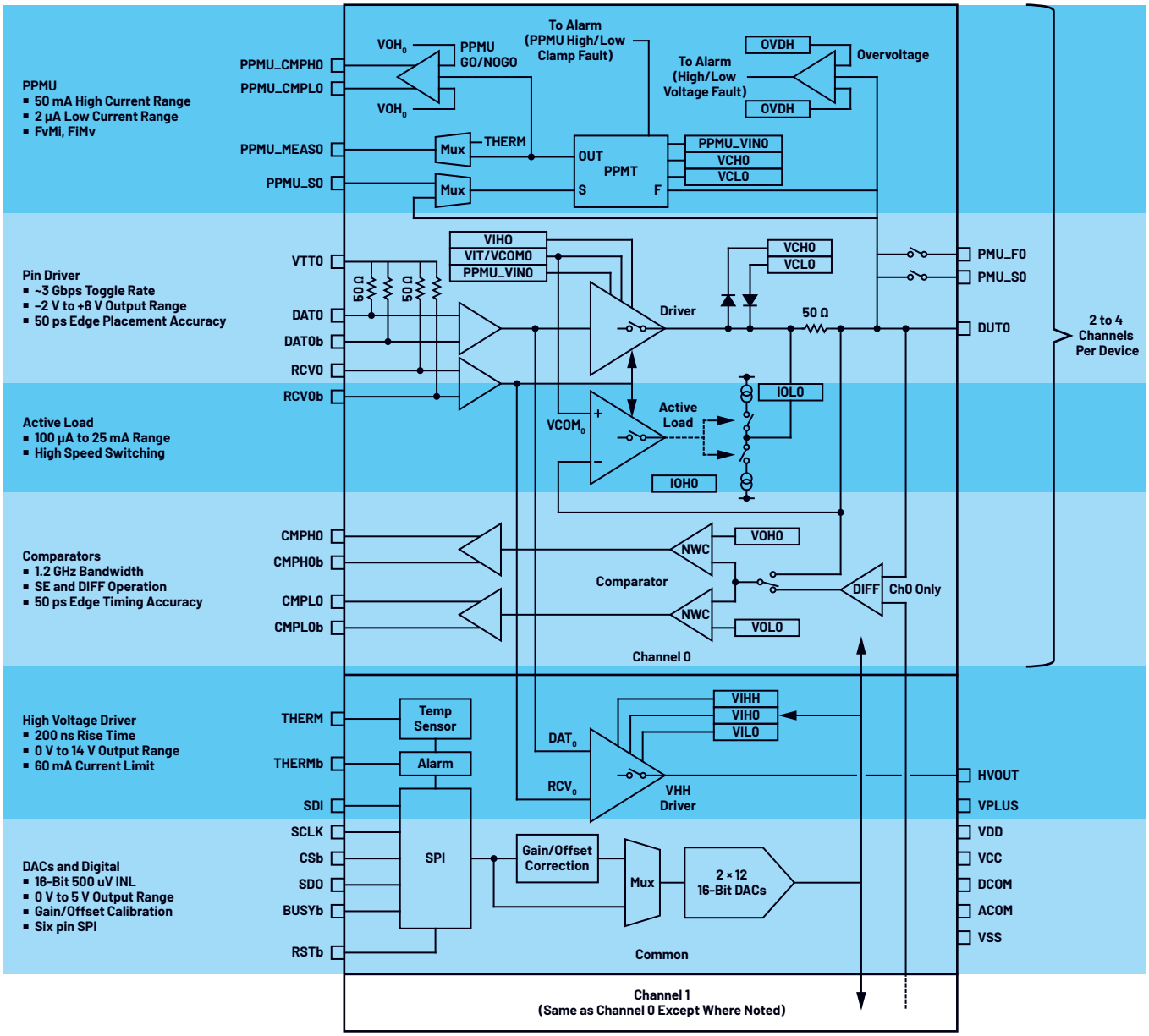

Figure 2. ADATE3xx block diagram and typical key features.

Digital/PE Board Example and Power Solution

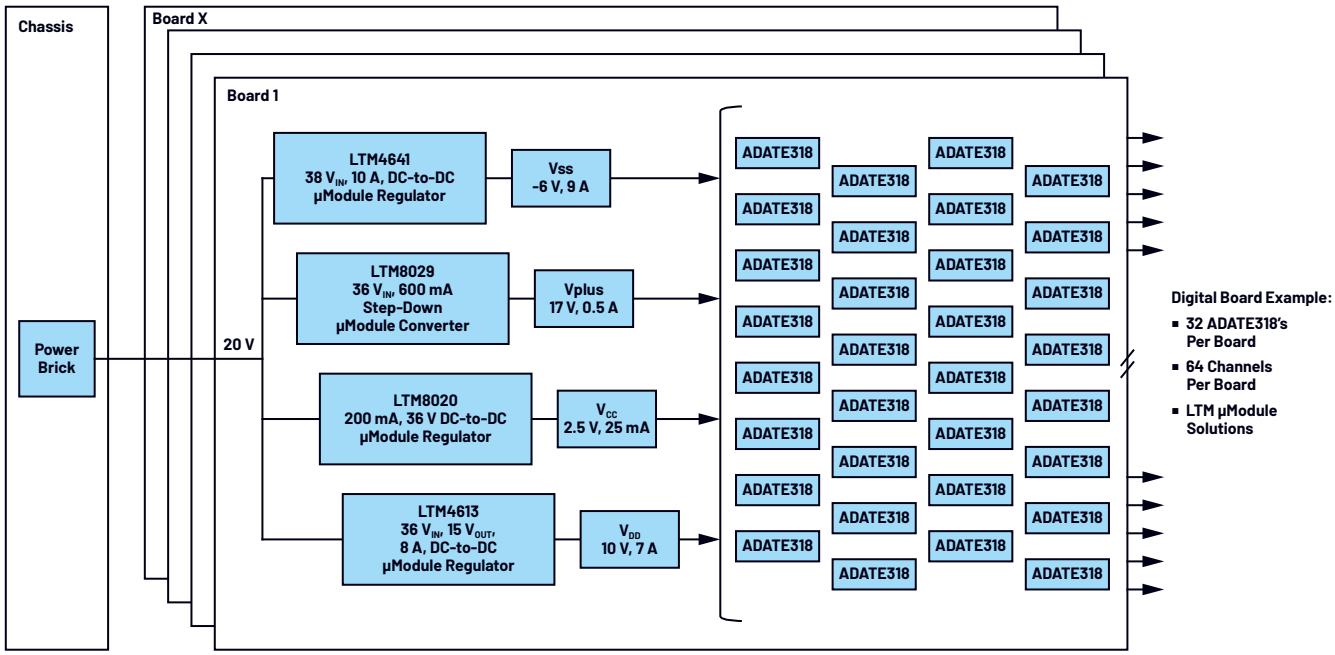

Figure 3. Digital/PE board example and power solution.

Parametric Measurement Units and Device Power Supplies

The parametric measurement unit has a wide range of applications in the field of testing and measurement. For example, in I-V characteristic curve test for semiconductor devices, open-circuit short-circuit test, parameter test for nonlinear devices or materials, etc. The PMU works in all four limits of the V/I coordinate axis and is capable of measuring one type of signal while outputting another. Functions that required multiple instruments to work simultaneously can now be achieved by a single IC to meet the needs of four channels thanks to a single ADI product such as AD5522. Many well-proven SMU products, commonly built with discrete devices, have been put on the market and can realize a variety of current/voltage output combinations and accurate measurement, but they have the disadvantages of a highly complex structure and high cost. This does not meet the high channel density design requirements at all. The AD5522 not only integrates the loop control and clamping functions of force voltage and force current, but also internally integrates shunt resistors at multiple ranges to realize multigear current measurement, and it has both CCOMP and CFF compensation pins cooperating with the external multiplexer to realize a variety of compensation and select feed-forward networks, which can adapt to various complex external DUT load parameter configurations. In addition, PMU products can also be used as a DPS in some cases where the current demand of the object to be tested is low. Therefore, ADI's AD5522 PMU and AD5560 DPS products provide flexible voltage and current source/measurement functions to meet the requirements of various test applications with µModule devices, as shown in Figure 4. ADI's PMU and DPS products have unique precision measurement and control capabilities to meet the requirements of various precision test applications and today's demanding ATE solutions.

DPS Board Example and Power Solution

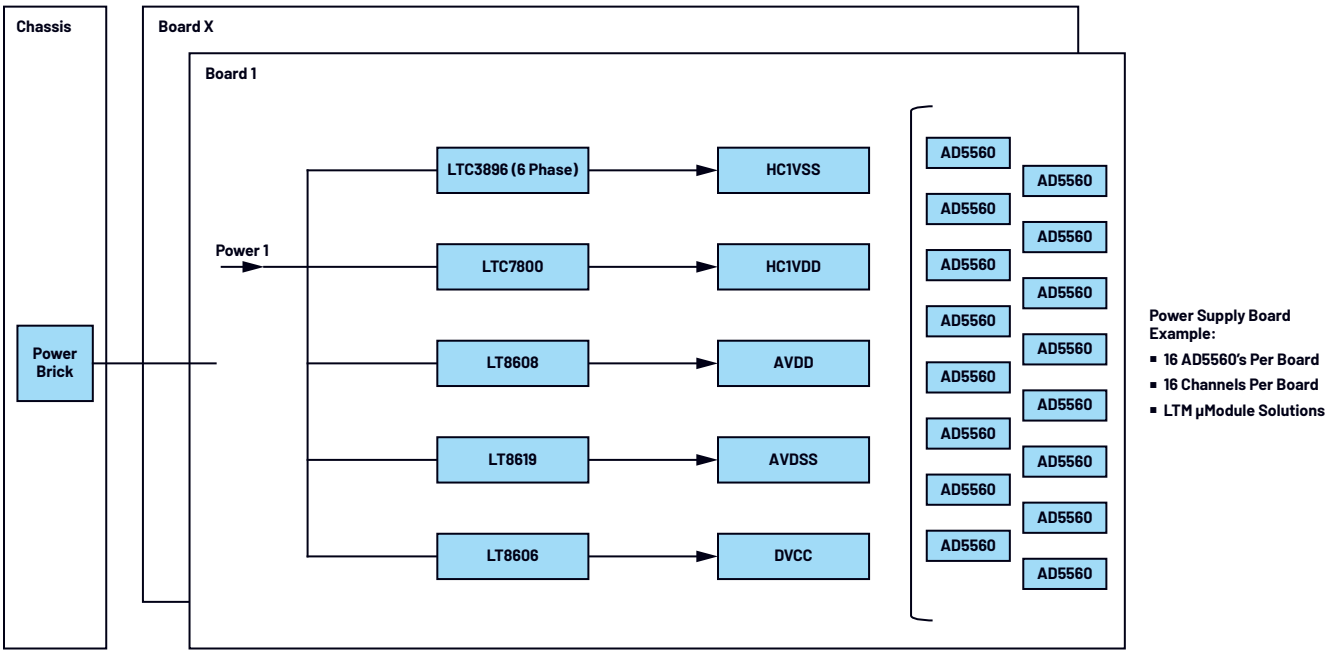

Figure 4. DPS board example and power solution.

Switch

ATE test types and the complexity of signals will affect the test hardware architecture, as well as the relevant switching functions. For ATE test instrumentation, a high level block diagram of a typical test equipment setup is shown in Figure 1. Typically, the digital pin driver, parametric measurement units, power supply, and associated switches are all integrated into a single instrument test card within the ATE test equipment. ADI boasts a number of switches that can be used in the industrial field, and recently released a new switch ADGS1414D that, through SPI signal control, can reduce the area occupied by the original switch by 80%, as shown in Figure 5. Additionally, in a semiconductor test system, the prober card, also known as a wafer probe tester, simply loads the wafer into the machine and makes contact between the wafer and the test probe of the test head to perform wafer testing. A load board is a hardware interface between the tester and the object to be tested, through which the signal source and the probe can be connected to the object to be tested. Generally speaking, there are still some components on the load board design, such as switches. Many high speed signal IC tests, whether placed in the prober card or load board design, require a high speed switch to be used for high speed signal loop tests such as PCIe 4G/5G, PAM 4, HDMI® 2.1, and USB 4.0. However, these types of loop tests must support DC signal measurement. ADI MEMS switches such as ADGM1304/ADGM1004, as shown in Figure 6, are quite suitable for this type of high speed signal loop back mode test.

Switch Channel Density Demo: 1 to 200 Fanout

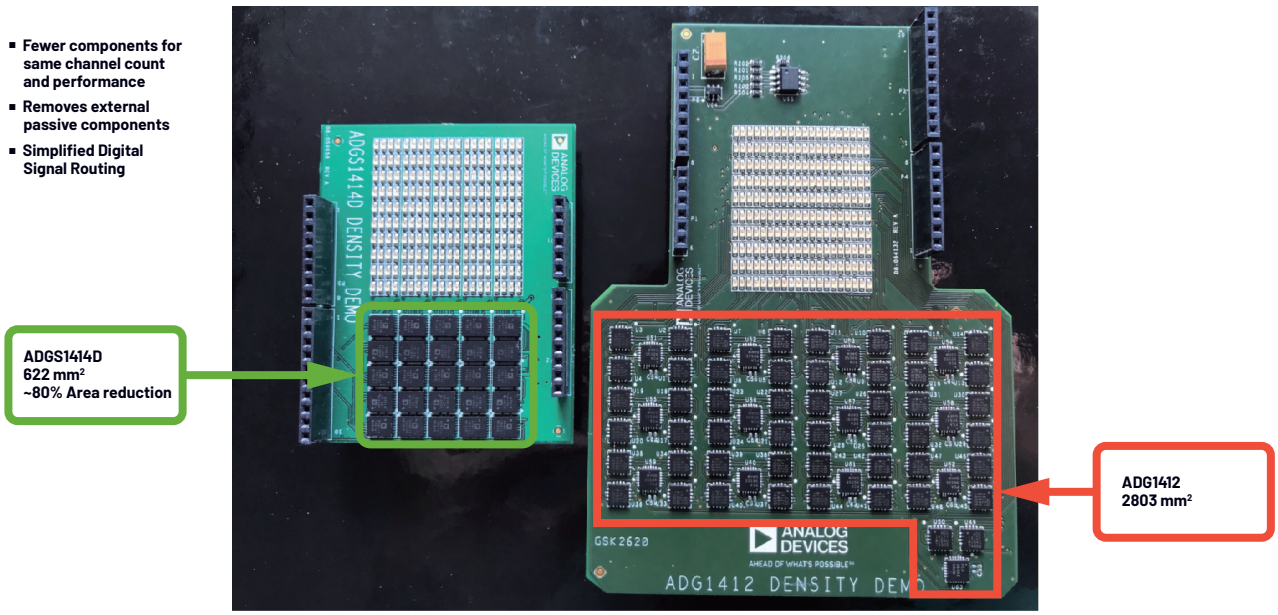

Figure 5. Switch channel density demo: 1 to 200 fanout.

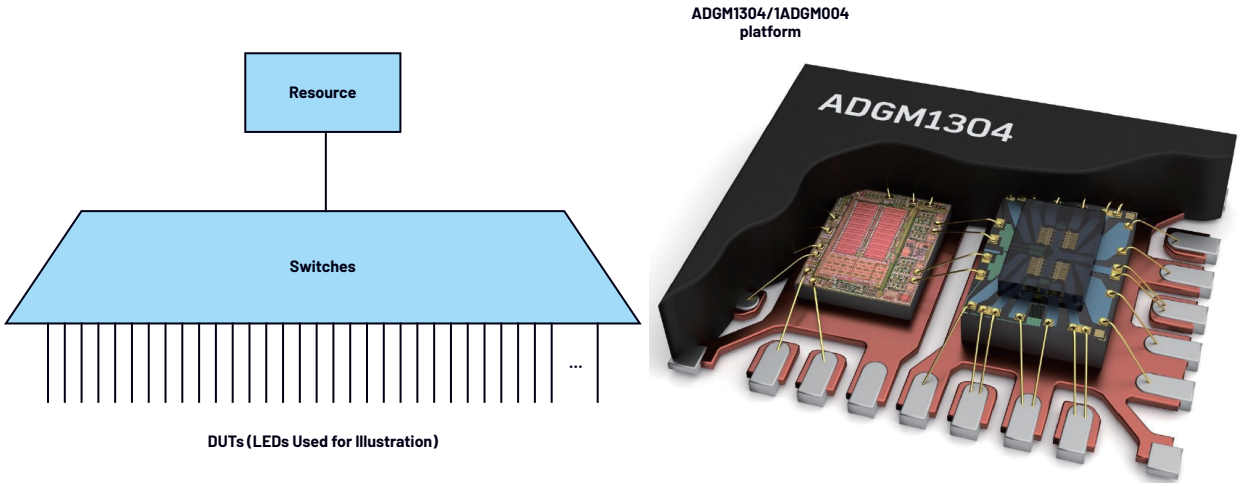

Figure 6. Switch channel density demo 1 to 200 fanout.

Conclusion

ADI has been providing ATE test solutions for at least 25 years, and the consistency and stability of product development have been deeply rooted in the ATE customer base. In addition to dedicated ATE test chips, there are also many analog products such as multichannel ADCs, high voltage op amps, low drift voltage references, and µModule or power monitoring products, as shown in Figure 7. These all show that ADI's ATE products are the best and only choice for our customers. For more product requirements, please refer to the links in Table 1.

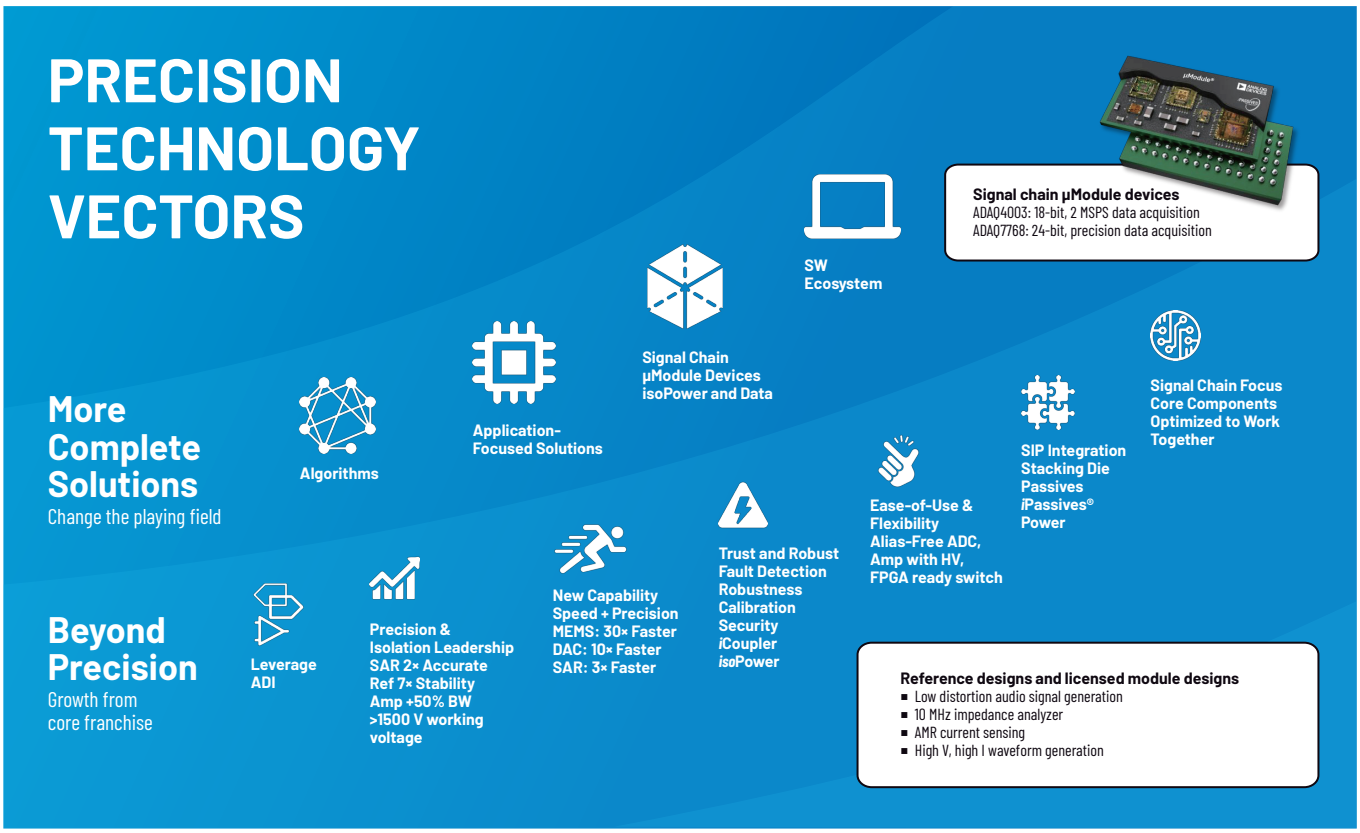

Figure 7. Precision technology vectors.

Table 1. Main Products

Device	Specifications	Applications
PE		
ADATE302/ ADATE304/ ADATE305/ ADATE318/ ADATE320/ ADATE334	250 MHz to ~2.3 GHz dual integrated DCL with level setting DACs, per pin PMU, and per chip VHH	Suitable for ATE equipment, high speed IC pin testing, and AC specification/DC specification testing
PMU		
AD5522	Quad parametric measurement unit with integrated 16-bit level setting DACs	Suitable for ATE equipment, SMU source measurement unit, and IC pin open short test
DPS		
AD5560	1.2 A programmable device power supply with integrated 16-bit level setting DACs	Used on power supply for the device to be tested on ATE test equipment
Mux		
ADGS1414D	SPI, 1.5 Ω R_{ON}, ±15 V/±5 V/+12 V, high density octal SPST switch	Suitable for applications such as small signal switching and compensation capacitor selection
ADGM1304/ ADGM1004	0 Hz/DC to 14 GHz, single-pole, four-throw MEMS switch with integrated driver	High speed signal test switch, such as the design of load board or prober card
Power		
LTM4676/ LTM4xxx	Dual 13 A or single 26 A µModule regulator with digital power system management	Suitable for power supply for ATE test platforms or various boards
LT8648S	42 V, 15 A synchronous step-down Silent Switcher® 2 device	High power density, high current, low noise power converters
LTC3260	Low noise dual supply inverting charge pump	Low power auxiliary positive and negative power supply for low ripple generation under a single power supply
ADC		
AD7606C-18/ AD7606C-16	8-channel DAS with 16-/18-Bit, 1 MSPS bipolar input, simultaneous sampling ADC	Suitable for high speed, multichannel synchronous data acquisition scenarios, converting PE/PMU analog signals into digital signals in ATE systems
Reference		
ADR431/ ADR435	Low noise XFET voltage references with current sink and source capability	Suitable for voltage reference for precision test measurements
Amp		
LT6090/ LT6090-5	140 V CMOS rail-to-rail output, picoamp input current op amp	Suitable for applications requiring high voltage drive
ADHV4702	24 V to 220 V precision operational amplifier	Suitable for applications requiring high voltage and current drive
ADA4522-1/ ADA4522-2/ ADA4522-4	Single 55 V, EMI enhanced, zero-drift, ultralow noise, rail-to-rail output operational amplifiers	Suitable for applications requiring high pressure, low temperature drift precision measurements
LT1210	1.1 A, 35 MHz current feedback amplifier	1.1 A, 35 MHz current feedback amplifier
LT1997-3	Precision, wide voltage range gain selectable amplifier	Suitable for differential-mode signal extraction under high common-mode voltage, especially for high-side current detection

Design Resources

- Automated Test Equipment products selection list
- Application Notes AN-1574: Parametric Measurement Unit and Supporting Components for ATE Applications
- The Fundamentals of Analog Devices' Revolutionary MEMS Switch Technology
- Design Notes DN513: High Voltage CMOS Amplifier Enables High Impedance Sensing with a Single IC
- User Guides UG-1870: Evaluating the AD7606C-18 8-Channel DAS with 18-Bit, 1 MSPS Bipolar Input, Simultaneous Sampling ADC (Rev. 0)

Design Resources

- LTspice®: ADI Circuit Simulator Tool
- EngineerZone®: Online Technical Support Community

Engage with the ADI technology experts in our online support community. Ask your tough design questions, browse FAQs, or join a conversation.

Visit *ez.analog.com*

ADI EngineerZone™
SUPPORT COMMUNITY

ANALOG DEVICES
AHEAD OF WHAT'S POSSIBLE™

For regional headquarters, sales, and distributors or to contact customer service and technical support, visit analog.com/contact.

Ask our ADI technology experts tough questions, browse FAQs, or join a conversation at the EngineerZone Online Support Community. Visit ez.analog.com.

©2021 Analog Devices, Inc. All rights reserved. Trademarks and registered trademarks are the property of their respective owners.

BR23245-9/21