ANALOG DEVICES

This document contains information considered proprietary, and shall not be reproduced wholly or in part, nor disclosed to others without specific written permission.

HARDWARE NAME:MAX22910_EVKIT_A

HARDWARE NUMBER:

ENGINEER: DESIGNER:

DATE: 08/2/2023 ODB++/GERBER: ASSEMBLY_TOP

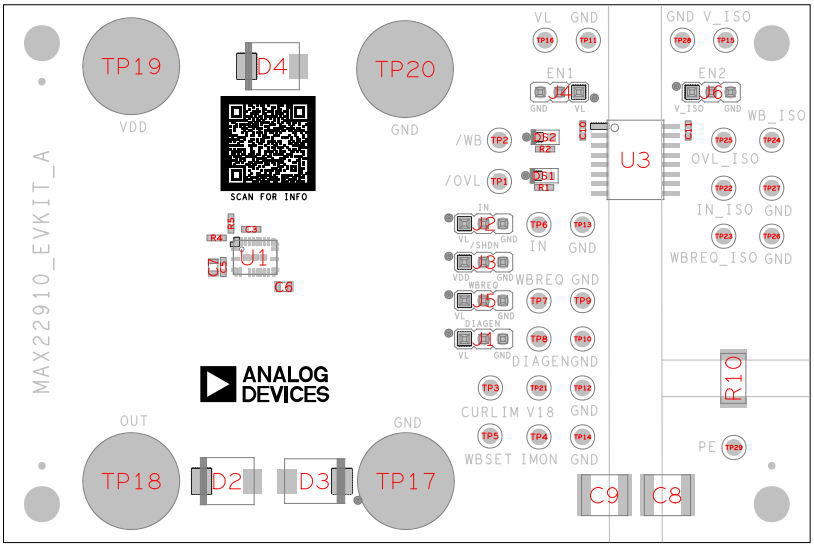

JUMPER SETTINGS		
JUM_REF	SHUNT_REF	SHUNT_POSITION
J1	SU1	1:2
J2	SU2	2:3
J3	SU3	1:2
J4	SU4	2:3
J5	SU5	1:2
J6	SU6	2:3

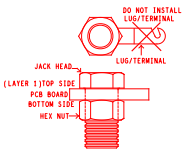

REFDES:TP17,TP19,TP18,TP20

BANANA JACK CONNECTOR ASSEMBLY