RELAY CONTROL CHART

CONTROL	CODE	DEVICE	FUNCTION	CONNECTOR

JUMPER TABLE

JP#	ON	OFF
1		
2		
3		
4		
5		

* SEE ASSEMBLY INSTRUCTIONS

REVISIONS

REV	DESCRIPTION	DATE	APPROVED

OPTIONAL SHIELD HARDWARE

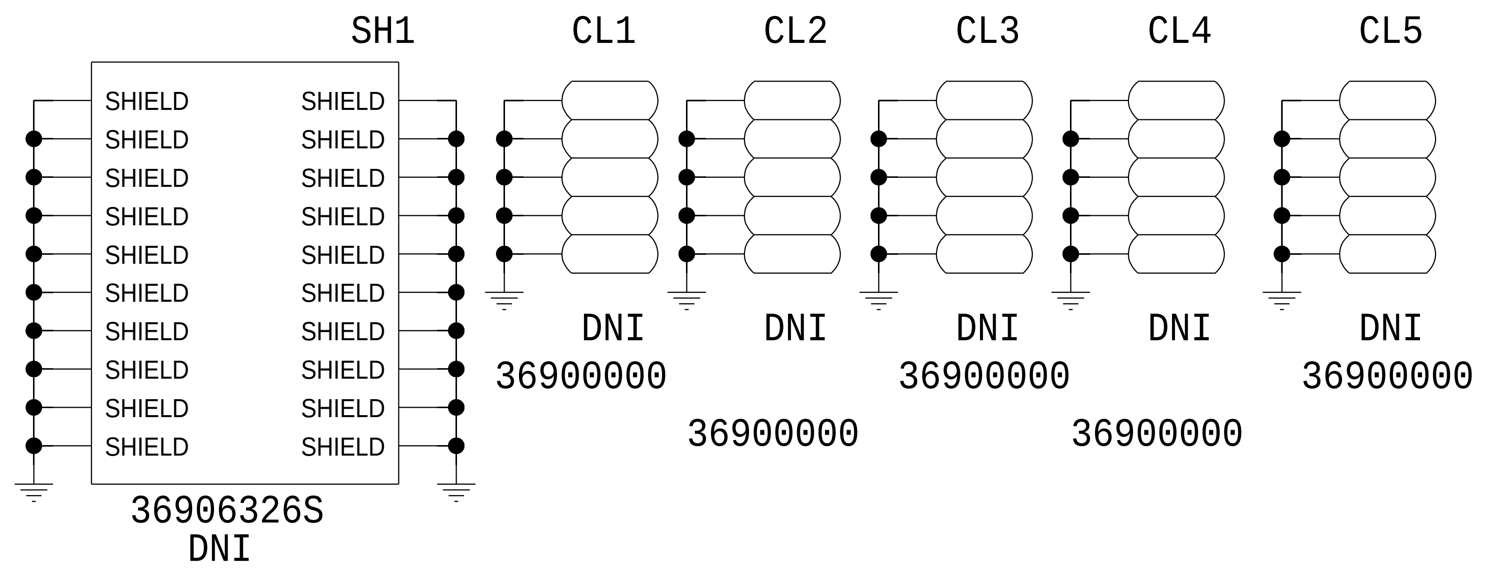

P.O SPEC.	BK/BD SPEC.	SOCKET OEM	OEM PART#	HANDLER

	DATE
TEMPLATE ENGINEER -	
HARDWARE SERVICES -	
HARDWARE SYSTEMS -	
TEST ENGINEER -	
COMPONENT ENGINEER -	
TEST PROCESS -	
HARDWARE RELEASE -	
DESIGNER -	
PTD ENGINEER <PTD_ENGINEER>	
CHECKER -	

SCHEMATIC

ANALOG DEVICES

HW TYPE : Customer Evaluation

PACKAGE : LeadCount-lead BodySize PackageType-family

: Pitch-pitch StyleVendor Style

<DRAWING_TITLE3>

<DRAWING_TITLE4>

TITLE : LOW I_Q 40V, 3A BOOST/SEPIC/INVERTING CONVERTER

TBD

Product(s): LT8333RDD / EVAL-LT8333-BZ

MASTER PROJECT TEMPLATE: <MASTER_PROJECT_TEMPLATE>

TESTER TEMPLATE: <TESTER_TEMPLATE>

UNLESS OTHERWISE SPECIFIED DIMENSIONS ARE IN INCHES

TOLERANCES

DECIMALS	FRACTIONS	ANGLES
X.XX +-0.010 X.XXX +-0.005	+-1/32	+-2

DRAWING NO. 02_069598

REV. B

SIZE	SCALE	CODE ID NO.	SHEET	OF
C	1:1	CodeID	1	2

REVISIONS			
REV	DESCRIPTION	DATE	APPROVED
A	INITIAL RELEASE	JAN2022	
B	ECR-107459	MAR2022	

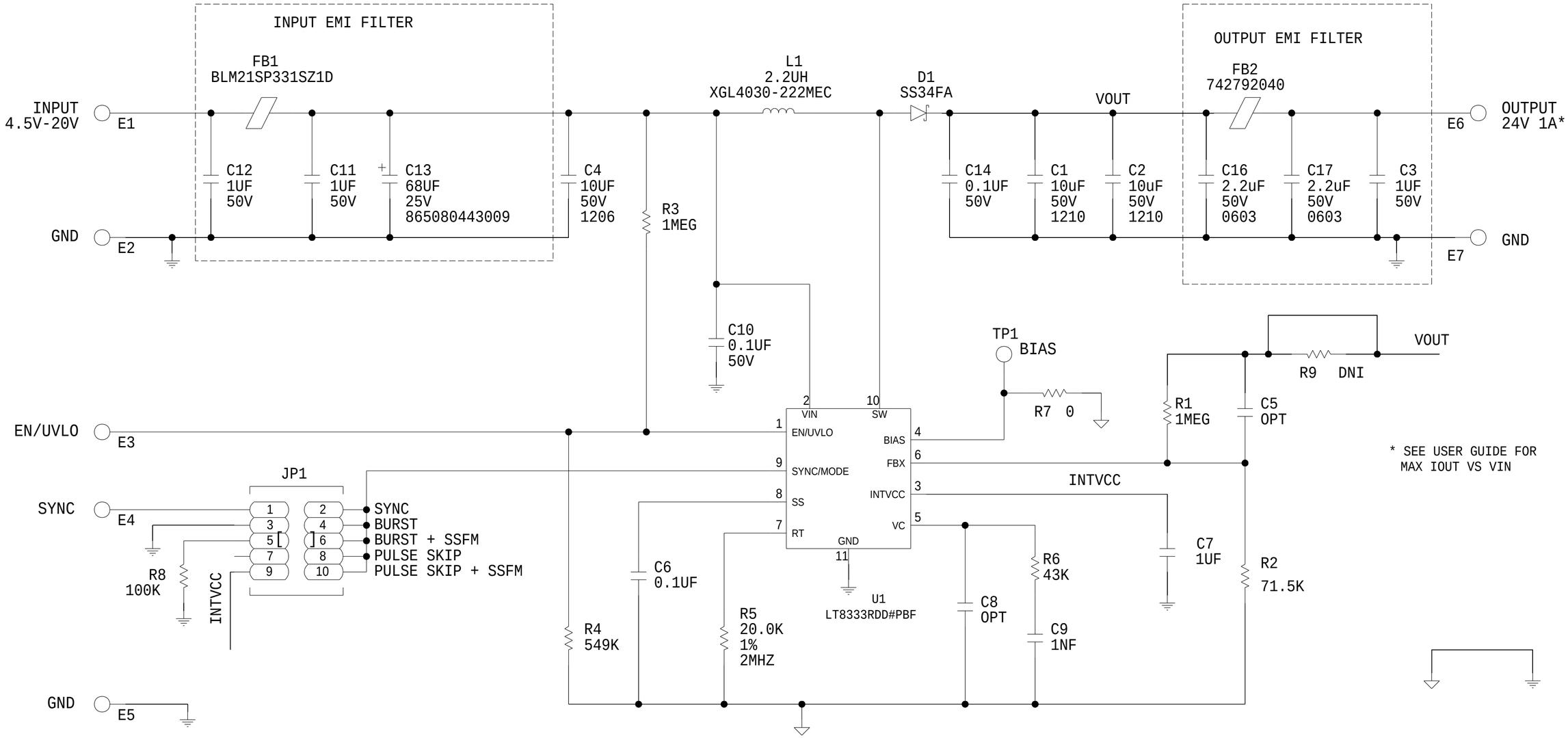

NOTES: UNLESS OTHERWISE SPECIFIED

1. ALL RESISTORS ARE 0402
2. ALL CAPACITORS ARE 0402

ANALOG DEVICES

THIS DRAWING IS THE PROPERTY OF ANALOG DEVICES INC.
IT IS NOT TO BE REPRODUCED OR COPIED, IN WHOLE OR
IN PART, OR USED IN FURNISHING INFORMATION TO OTHERS,
OR FOR ANY OTHER PURPOSE DETRIMENTAL TO THE INTERESTS
OF ANALOG DEVICES.
THE EQUIPMENT SHOWN HEREON MAY BE PROTECTED BY PATENTS
OWNED OR CONTROLLED BY OWNED ANALOG DEVICES.

SCHEMATIC

HW TYPE : Customer Evaluation
Product(s): LT8333RDD / EVAL-LT8333-BZ
Title : LOW I 40V, 3A BOOST/SEPIC/INVERTING CONVERTER

DESIGN VIEW	DRAWING NO.	REV
<DESIGN_VIEW>	02_069598	B

PTD ENGINEER	SIZE	SCALE	SHEET	OF
<PTD_ENGINEER>	C	1:1	2	2