THIS DRAWING IS THE PROPERTY OF ANALOG DEVICES INC. IT IS NOT TO BE REPRODUCED OR COPIED, IN WHOLE OR IN PART, OR USED IN FURNISHING INFORMATION TO OTHERS, OR FOR ANY OTHER PURPOSE DETRIMENTAL TO THE INTERESTS OF ANALOG DEVICES.
THE EQUIPMENT SHOWN HEREON MAY BE PROTECTED BY PATENTS OWNED OR CONTROLLED BY ANALOG DEVICES.

REVISIONS

REV	DESCRIPTION	DATE	APPROVED
A	INITIAL RELEASE	10JAN22	I. ANDAL
B	ECR-107027	06FEB22	I. ANDAL
C	ECR-114906	14JUL23	D.DALISAY

P.O SPEC.	BK/BD SPEC.	SOCKET OEM	OEM PART#	HANDLER

TEMPLATE ENGINEER -	DATE	
HARDWARE SERVICES M. VALE	10JAN22	
HARDWARE SYSTEMS -		
TEST ENGINEER -		
COMPONENT ENGINEER A. GIRON	10JAN22	
TEST PROCESS -		
HARDWARE RELEASE K. JABATAN	10JAN22	
DESIGNER R. PLANADA	10JAN22	
PTD ENGINEER I. ANDAL	10JAN22	
CHECKER -		

SCHEMATIC

ANALOG DEVICES

HW TYPE : Customer Evaluation Z
Product(s): AD5683R
: ADP150A, ADR4525D
PACKAGE : LeadCount-lead BodySize MSOP-family
: Pitch-pitch StyleVendor Style

<User Define>
<User Define>
<User Define>

MASTER PROJECT TEMPLATE: TBD
TESTER TEMPLATE: 064489_C

UNLESS OTHERWISE SPECIFIED DIMENSIONS ARE IN INCHES
TOLERANCES
DECIMALS: X.XX +-0.010, X.XXX +-0.005
FRACTIONS: +-1/32
ANGLES: +-2

DRAWING NO. 02_070088-02
REV. C

SIZE D | SCALE 1:1 | CODE ID NO. CodeID | SHEET 1 OF 3

REVISIONS			
REV	DESCRIPTION	DATE	APPROVED

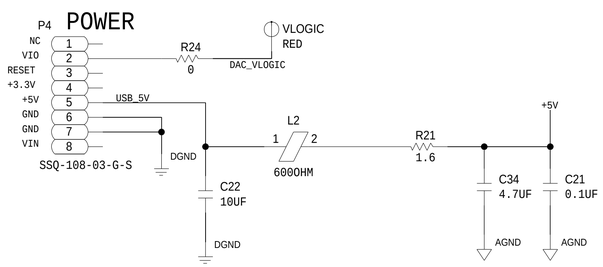

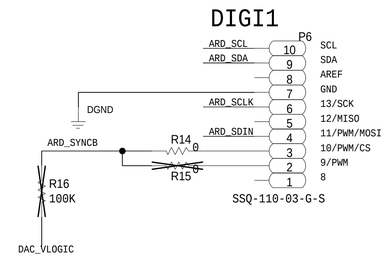

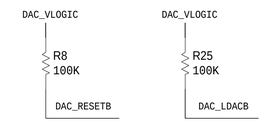

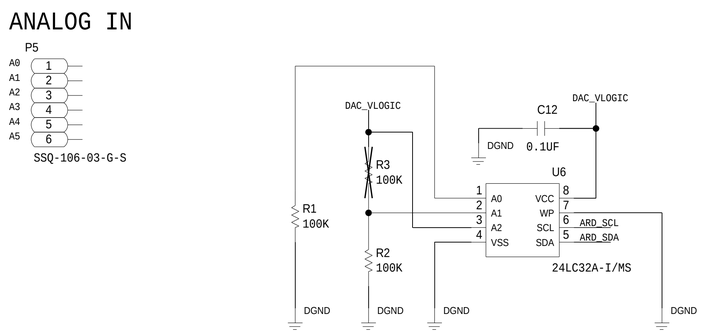

DEFAULT ADDRESS : 0X54

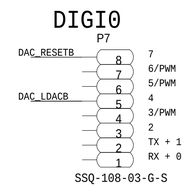

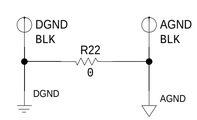

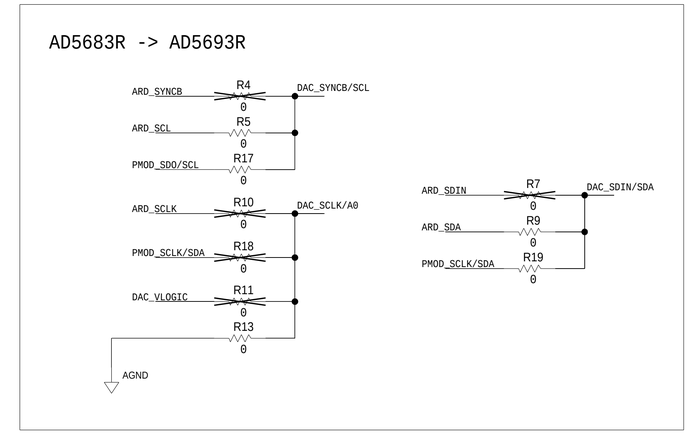

ANALOG DEVICES

THIS DRAWING IS THE PROPERTY OF ANALOG DEVICES INC.
IT IS NOT TO BE REPRODUCED OR COPIED, IN WHOLE OR
IN PART, OR USED IN FURNISHING INFORMATION TO OTHERS,
OR FOR ANY OTHER PURPOSE DETRIMENTAL TO THE INTERESTS
OF ANALOG DEVICES.
THE EQUIPMENT SHOWN HEREON MAY BE PROTECTED BY PATENTS
OWNED OR CONTROLLED BY OWNED ANALOG DEVICES.

SCHEMATIC

HW TYPE : Customer Evaluation Z
Product(s): AD5683R
: ADP150A, ADR4525D

DESIGN VIEW	DRAWING NO.	REV
<DESIGN_VIEW>	02_070088-02	C

PTD ENGINEER	SIZE	SCALE	SHEET	OF
I. ANDAL	D	1:1	2	3

REVISIONS			
REV	DESCRIPTION	DATE	APPROVED

ANALOG SUPPLY

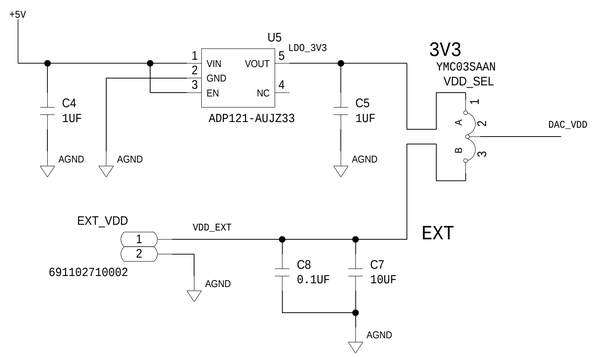

DIGITAL SUPPLY

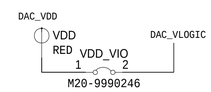

CONNECT ONLY IF THE SDP IS NOT CONNECTED

PMOD CONNECTOR

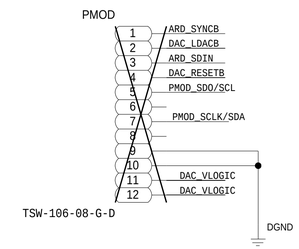

PLEASE LABEL TP AS PER THE NET IT IS CONNECTED TO

REFERENCE

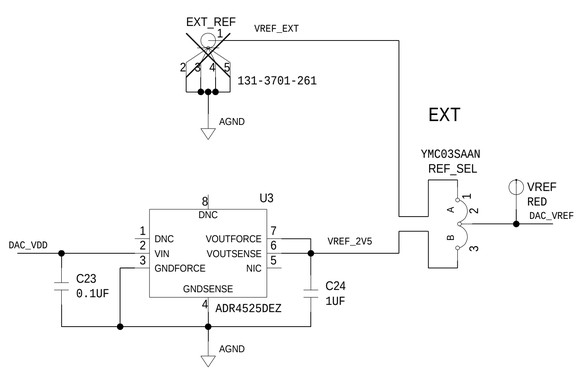

NANODAC+

PLEASE LABEL TP AS PER THE NET IT IS CONNECTED TO

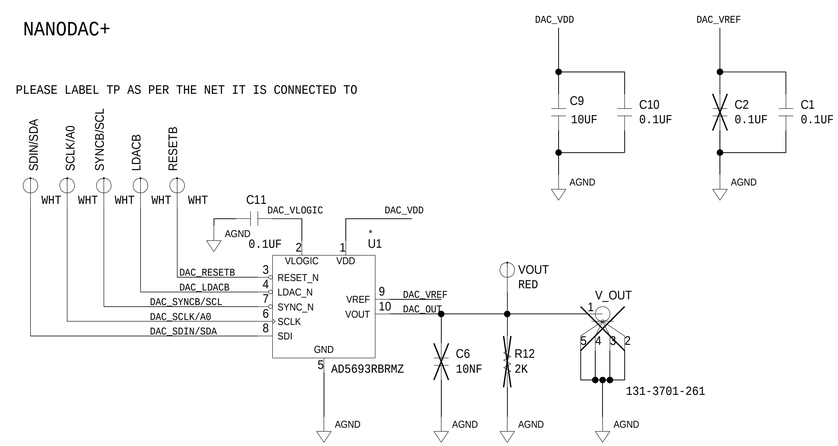

ANALOG DEVICES

THIS DRAWING IS THE PROPERTY OF ANALOG DEVICES INC.
IT IS NOT TO BE REPRODUCED OR COPIED, IN WHOLE OR
IN PART, OR USED IN FURNISHING INFORMATION TO OTHERS,
OR FOR ANY OTHER PURPOSE DETRIMENTAL TO THE INTERESTS
OF ANALOG DEVICES.
THE EQUIPMENT SHOWN HEREON MAY BE PROTECTED BY PATENTS
OWNED OR CONTROLLED BY OWNED ANALOG DEVICES.

SCHEMATIC

HW TYPE : Customer Evaluation Z
Product(s): AD5683R
: ADP150A, ADR4525D

DESIGN VIEW	DRAWING NO.	REV
<DESIGN_VIEW>	02_070088-02	C

PTD ENGINEER	SIZE	SCALE	SHEET
I. ANDAL	D	1:1	3 OF 3