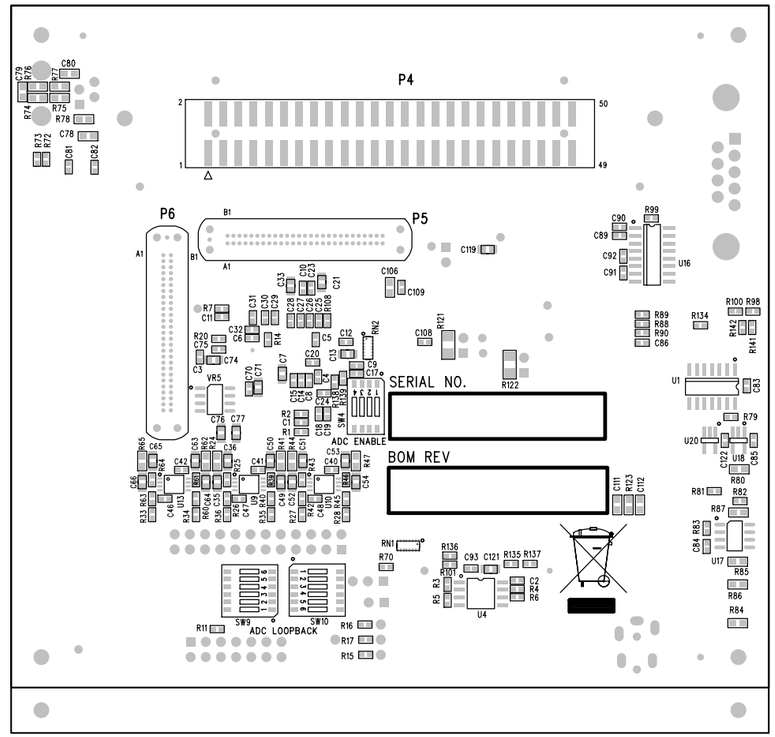

UNLESS OTHERWISE SPECIFIED DIMENSIONS ARE IN INCHES TOLERANCES ARE : .XX +/- .010 .XXX +/- .005	CONTRACT NO.		ANALOG DEVICES — 20 Cotton Road, Nashua, New Hampshire 03063, (603) 883-2430 FAX (603) 882-2655
	APPROVALS	DATE	ASSEMBLY DRAWING BOTTOM SIDE
MATERIAL	DRAWN	11/18/09	ADSP-BF506F EZ-KIT LITE BOARD
	CHECKED		
FINISH	ENGINEERING		SIZE B — DWG. NO. ASSMAA0226-2009-REF — REV. 1.0
	QUALITY		
DO NOT SCALE THIS DRAWING	MANUFACTURING		SCALE 1 : 1 — SHEET 2 OF 2