ADI Vision-Based Occupancy Sensing Solution

Overview

Analog Devices has developed a low cost, low power embedded computer vision platform targeting a vast array of real-time sensing applications. The Blackfin® low power imaging platform (BLIP) leverages the latest entry within the industry-leading, low power Blackfin processor family as well as Analog Devices' optimized software library deliverables. This solution offers end equipment manufacturers an out of the box development platform; with multiple functional profiles covering intelligent motion sensing, people counting, vehicle detection, and face detection; deployable indoors as well as outdoors all in an impressive form factor. The BLIP system includes an intuitively configured GUI and enables real-time analysis of captured video, as well as video output/display through an on-board USB port, making it a highly valuable tool for product development. Additionally, the associated documentation package is well positioned to help customers accelerate their time to market.

Target Applications Include

- Indoor/outdoor lighting control
- HVAC system control
- Access control systems
- Premise monitoring systems
- In-vehicle occupancy detection
- Logistics/retail analytics

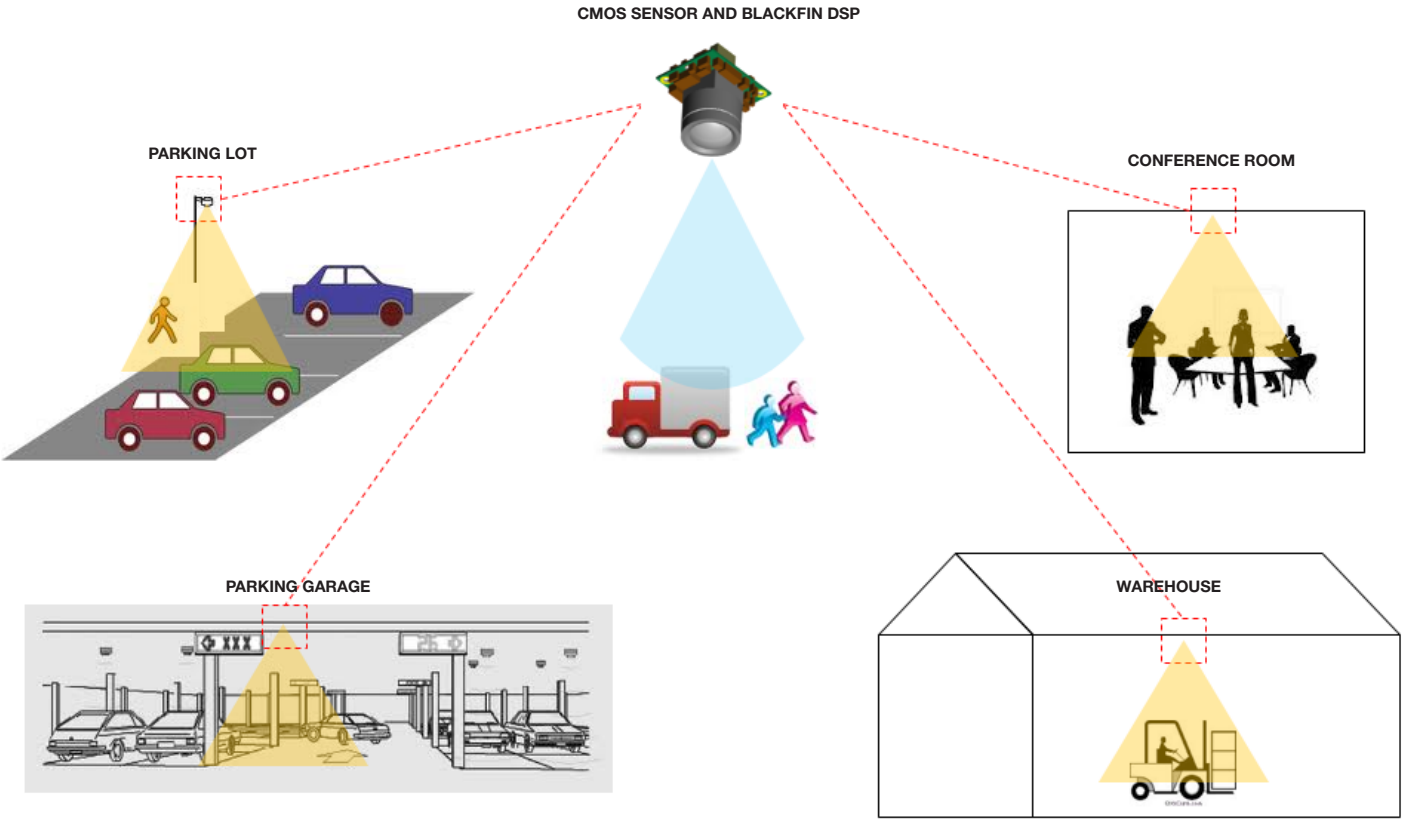

System Block Diagram

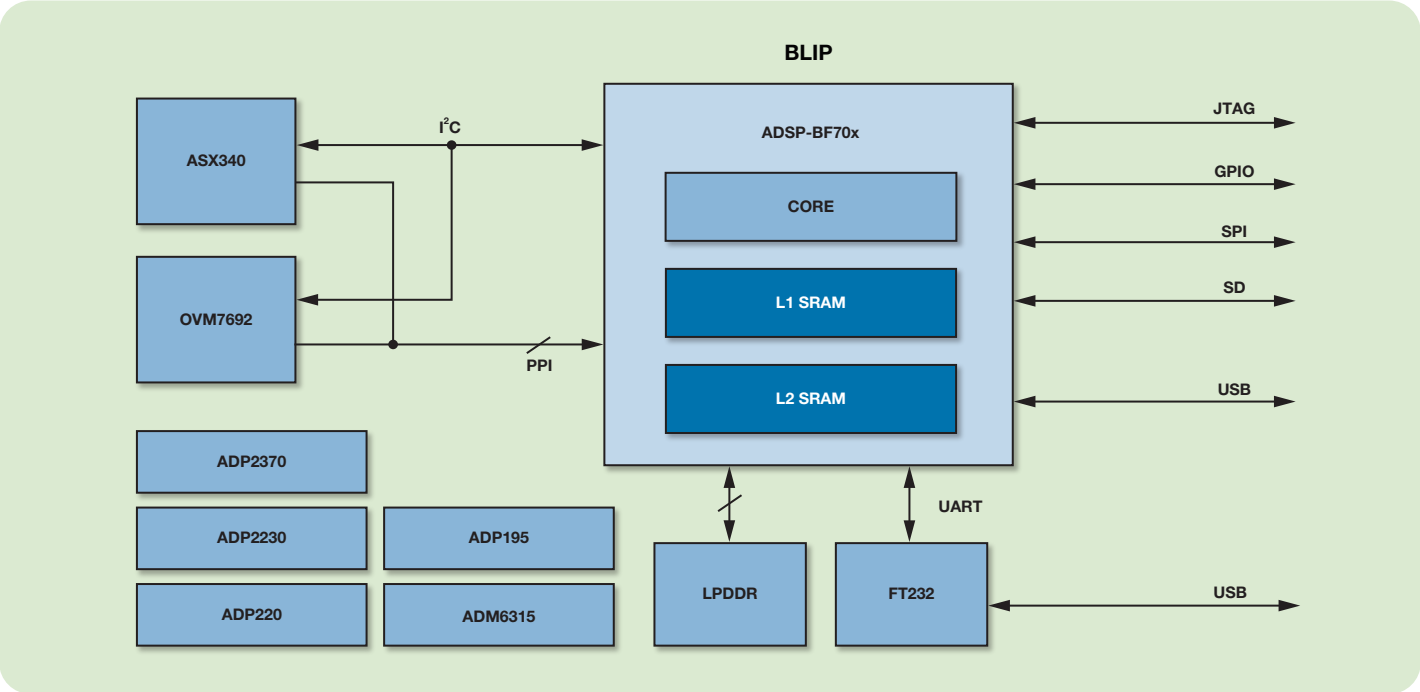

The signal chain above represents the design for BLIP. The technical requirements of the blocks vary, but the products listed in the table below are representative of ADI's solutions to meet some of those requirements.

BLIP Features

BF70x DSP

- 400 MHz DSP core clock
- 1 MB L2 SRAM
- Integrated USB controller
- Customer IP protection with fast secure boot and authentication

Two Options of CMOS Imager

- OVM7692 Omnivision camera module
  - Ultralow cost VGA sensor integrated with lens
- ASX340 Aptina CMOS sensor
  - Good responsivity (larger pixel) for low light condition
  - WVGA resolution, separate interchangeable lens

External LPDDR (Optional)

- If LPDDR is not needed, customer can change to 88-pin QFN

USB and Serial Interface

SPI/UART/GPIO Connectivity to External Host

Easy to Use IDE

- Eclipse-based IDE with zero threshold for entry

Video Occupancy Sensor Module

The Analog Devices BLIP hardware platform is delivered with a preloaded occupancy software module that has been optimized to detect the presence and behavior of humans or vehicles within indoor and outdoor environments. This advanced detection operation provides significantly improved performance compared to single pixel PIR sensor solutions targeting lighting control, climate control, and access control applications.

Blackfin Image Processing Toolbox

The Analog Devices video occupancy sensor software module and many other image analysis module deliverables are based upon the Blackfin image processing toolbox. This toolbox is a set of image processing primitives designed to enable faster development of complex image or video processing solutions for use on Blackfin processors. These primitive functions have been highly optimized to achieve the most efficient results possible on the Blackfin ADSP-BF5xx, ADSP-BF60x, and ADSP-BF70x families of devices. This toolbox library is MISRA-C compliant and also includes C reference code for the primitives and wrapper code layers for open CV and similar, APIs.

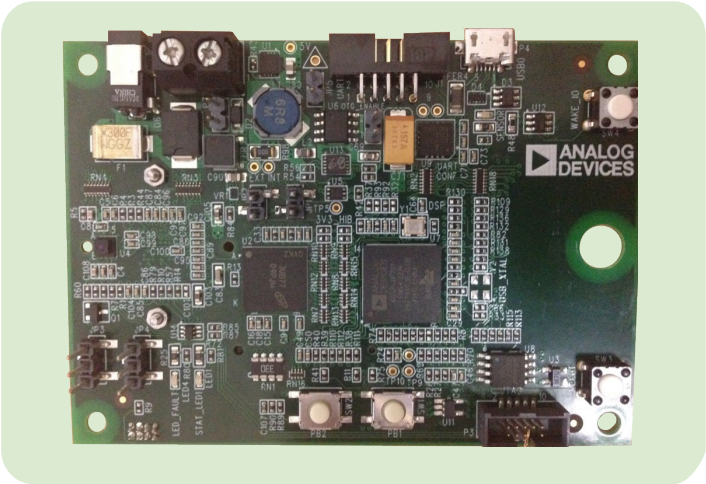

Top view.

Bottom view.

Main Product Introduction

Device	Description	Key Features	Benefits
Processor			
ADSP-BF70x	ADSP-BF70x belongs to the Blackfin processor family, a high performance DSP series	ADSP-70x delivers a class-leading 800 MMACS of processing power at less than 100 mW—double the performance or half the power of competing devices; it includes up to 1 MB of internal SRAM, eliminating external memory in many applications, while a second configuration features an optional DDR memory interface	The ADSP-BF70x family offers unparalleled flexibility and functionality through an array of advanced connectivity options (including USB, SDIO, CAN, ePPI, SPORT, QuadSPI); ADSP-BF707 running occupancy detection algorithm @ 400 MHz frequency
Power			
ADP2370	DC-to-DC regulator	High input voltage range: 3.2 V to 15 V, 1.2 MHz/600 kHz, 800 mA, low quiescent current; 8-lead, 0.75 mm × 3 mm × 3 mm LFCSP (QFN) package	High efficiency of up to 92%
ADP2230	DC-to-DC regulator	Dual 2 MHz, 800 mA, synchronous, low quiescent current; in a small, 10-lead, 3 mm × 3 mm, LFCSP package	High efficiency of up to 94%
ADP220	Linear regulator	Input voltage range: 2.5 V to 5.5 V; dual independent 200 mA low dropout voltage regulators, miniature 6-ball, 1.0 mm × 1.5 mm WLCSP, initial accuracy: ±1%	Low noise, high PSRR
ADP195	DC-to-DC regulator	Logic controlled, operation between 1.1 V to 3.6 V and protected against reverse current flow from output to input; 1.1 A maximum continuous operating current; ultralow on resistance (RDSON)	High-side power switch with reverse current blocking, ultrasmall 1 mm × 1 mm, 4-ball, 0.5 mm pitch WLCSP
ADM6315	Microprocessor supervisory	Low power consumption (5 μA typical); precision voltage monitor from 2.5 V to 5 V at 100 mV increments; reset timeout periods: 1 ms, 20 ms, 140 ms, or 1120 ms (minimum)	Specified over temperature; cost and space efficient
ADP5090	Boost regulator with MPPT and charge management	Input voltage operation range from 100 mV (minimum) to 3.3 V (maximum), programmable MPPT ratio for PV or TEG energy sources with open voltage sensing (OCV), programmable voltage monitor (2 V to 5.3 V) to support charging different storage	Ultralow quiescent current

More DSP products information, please visit *www.analog.com/blackfin*

What ADI Can Provide to Customers

- **Power** ADIsimPower™ : *www.analog.com/ADIsimPower*
- **Processor** emulation tools and software CrossCore® Embedded Studio: *www.analog.com/tools/CrossCoreEmbeddedStudio-Rel1.0.3.exe*

Customer Interaction Center

Technical Hotline *1-800-419-0108 (India)*
1-800-225-5234 (Singapore)
0800-055-085 (Taiwan)
82-31-786-2500 (Korea)

Email *cic.asia@analog.com*

EngineerZone *ez.analog.com*

Free Samples *analog.com/sample*

Analog Devices Greater China Headquarters
5F, Sandhill Plaza,
2290 Zuchongzhi Road
Zhangjiang Hi-Tech Park,
Pudong New District
Shanghai, 201203
China
Tel: 86.21.2320.8000
Fax: 86.21.2320.8222

Analog Devices, Inc. Korea Headquarters
6F Hibrand Living Tower
215 Yangjae-Dong
Seocho-Gu
Seoul, 137-924
South Korea
Tel: 82.2.2155.4200
Fax: 82.2.2155.4290

Analog Devices, Inc. Taiwan Headquarters
5F-1 No.408
Rui Guang Road, Neihou
Taipei, 11492
Taiwan
Tel: 886.2.2650.2888
Fax: 886.2.2650.2899

Analog Devices, Inc. India Headquarters
Rmz - Infinity
#3, Old Madras Road
Tower D, Level 6
Bangalore, 560 016
India
Tel: 91.80.4300.2000
Fax: 91.80.4300.2333

Analog Devices, Inc. Singapore Headquarters
1 Kim Seng Promenade
Great World City
East Tower, #11-01
Singapore, 237994
Tel: 65.6427.8430
Fax: 65.6427.8436

©2015 Analog Devices, Inc. All rights reserved.
Trademarks and registered trademarks are the property of their respective owners.

BR12971-0-1/15

security-surveillance.analog.com

ANALOG DEVICES