Dual-Channel, 14-Bit CCD Signal Processor with Precision Timing Core

FEATURES

- Dual AFE channels
- 1.8 V analog and digital core supply voltage
- Serial data output with reduced range LVDS outputs
- Differential analog inputs
- CDS or SHA configuration (CDS bypass) with −3 dB, 0 dB, +3 dB, and +6 dB gain
- 6 dB to 42 dB, 10-bit variable gain amplifier (VGA)
- 14-bit, 65 MHz analog-to-digital converter (ADC)
- Black level clamp with variable level control
- *Precision Timing* core with 240 ps resolution @ 65 MHz

APPLICATIONS

- Digital video cameras
- Digital still cameras
- Digital copiers
- Multifunction printers
- High speed industrial cameras

GENERAL DESCRIPTION

The AD9978 is a highly integrated, dual-channel CCD signal processor for high speed digital video camera applications. Each channel is specified at pixel rates of up to 65 MHz and consists of a complete analog front end with ADC conversion. The *Precision* Timing™ core allows adjustment of the correlated double sampler (CDS) and sample-and-hold amplifier (SHA) clocks with 240 ps resolution at 65 MHz operation. The AD9978 also contains a reduced range, low voltage differential signaling (LVDS) interface for the dual-channel data outputs.

Each analog front end includes black level clamping, a CDS, a VGA, and a 65 MHz, 14-bit ADC. Operation is programmed using a 3-wire serial interface.

Packaged in a space-saving, 6 mm × 6 mm, 40-lead LFCSP, the AD9978 is specified over an operating temperature range of −25°C to +85°C.

FUNCTIONAL BLOCK DIAGRAM

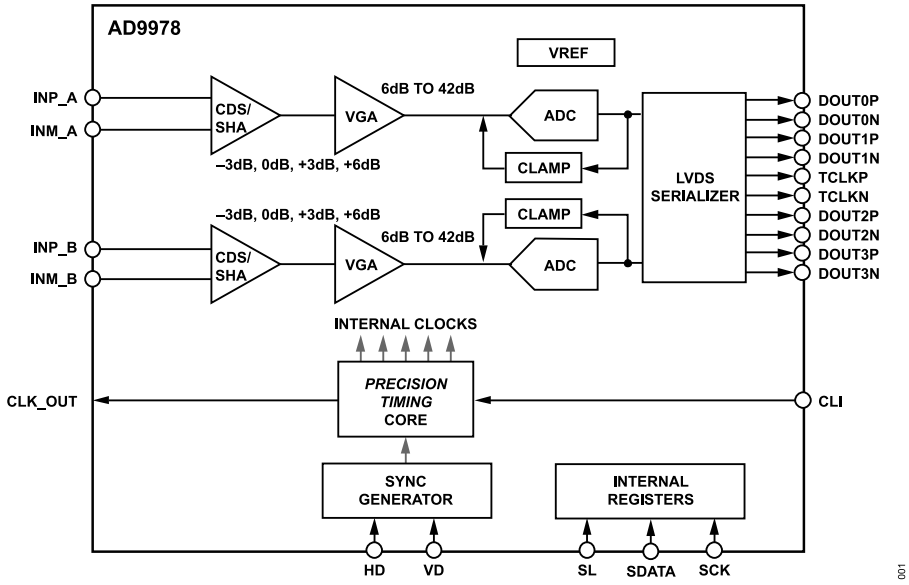

Figure 1.

For more information about the AD9978, contact Analog Devices via email at afe.ccd@analog.com.

Information furnished by Analog Devices is believed to be accurate and reliable "as is". However, no responsibility is assumed by Analog Devices for its use, nor for any infringements of patents or other rights of third parties that may result from its use. Specifications subject to change without notice. No license is granted by implication or otherwise under any patent or patent rights of Analog Devices. Trademarks and registered trademarks are the property of their respective owners. All Analog Devices products contained herein are subject to release and availability.

NOTES

©2007-2025 Analog Devices, Inc. All rights reserved. Trademarks and registered trademarks are the property of their respective owners.
One Analog Way, Wilmington, MA 01887-2356, U.S.A.