ANALOG DEVICES

8-Lead Standard Small Outline Package, with Expose Pad [SOIC_N_EP]
Narrow Body
(RD-8-2)
Dimensions shown in millimeters and (inches)

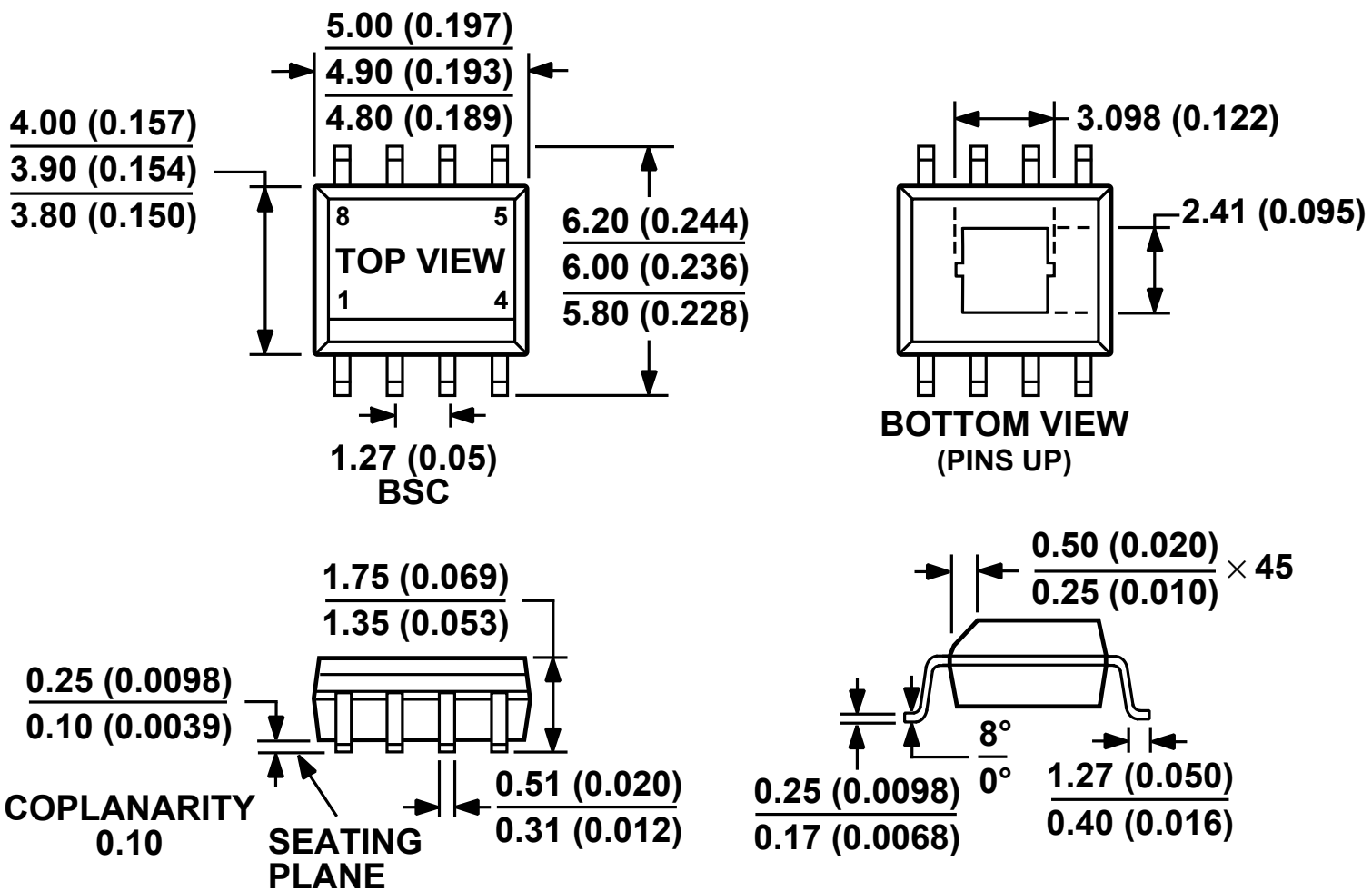

COMPLIANT TO JEDEC STANDARDS MS-012-AA

CONTROLLING DIMENSIONS ARE IN MILLIMETER; INCH DIMENSIONS (IN PARENTHESES) ARE ROUNDED-OFF MILLIMETER EQUIVALENTS FOR REFERENCE ONLY AND ARE NOT APPROPRIATE FOR USE IN DESIGN.