# Inside *i*Coupler Technology—Isolated RS-485

*By Hein Marais, Applications Engineer*

RS-485 differential communication networks are often used in harsh industrial and instrumentation applications. These networks are capable of communicating over distances as far as 4000 feet. When communicating over long distances in these harsh environments the following problems can occur:

- Ground loop currents due to the ground potential of different nodes being at different potentials
- Induced ground noise due to motors, inductive switching loads, and other noisy electrical equipment
- Harmful electrical surges

Galvanic isolation is a perfect solution if there is no guarantee that the potential at the earth grounds at different nodes in the system are within the common-mode range of the transceiver. Galvanic isolation allows information flow, but prevents current flow.

Traditionally, RS-485 networks were isolated using optocouplers for isolating the signals and an isolated dc-to-dc converter for power isolation (see Figure 1).

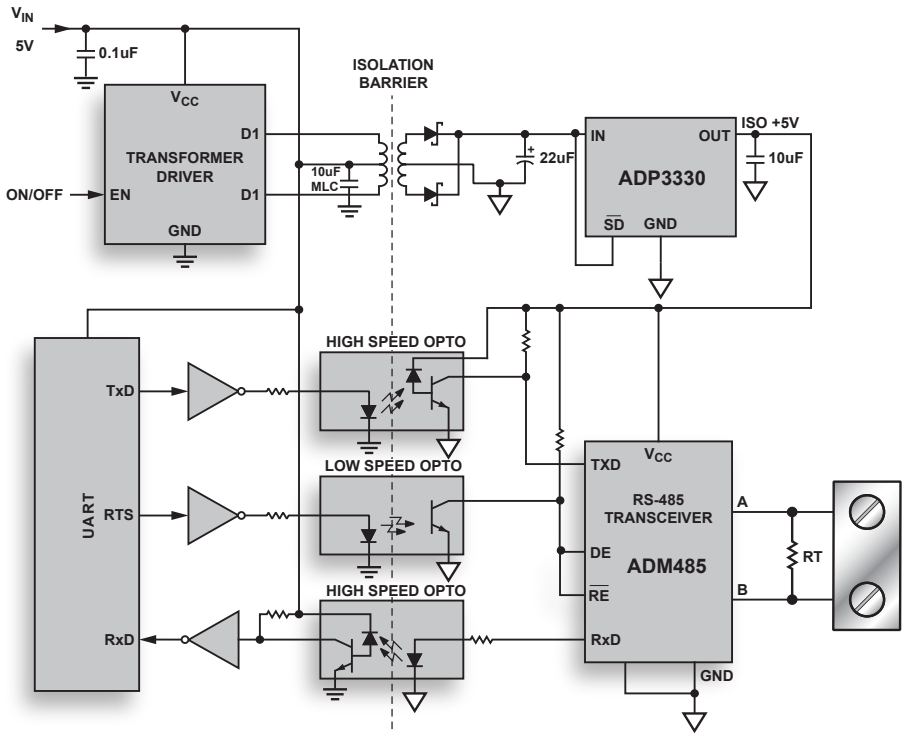


*Figure 1. Traditional isolated RS-485 node.*

Through the use of Analog Devices *i*Coupler® digital isolation chip scale transformer technology and *iso*Power® dc-to-dc converter technology, several improvements can be achieved over LEDs and photodiodes used in optocouplers:

- Performance: 2× to 4× higher data rate and timing accuracy
- Integration: wafer level fabrication enables lower size and cost
  - Allows for bidirectional communications by combining the Tx and Rx channels in the same package
  - Integrates an isolated dc-to-dc converter
- Power: 7× to 10× reduction
- Ease of use: standard CMOS interface without current-transfer-ratio headaches
- Reliability: CMOS level reliability eliminates long-term signal degradation of LEDs

The ADM2682E signal and power isolated RS-485 transceiver integrates Analog Devices *i*Coupler technology to combine a 3-channel isolator, a three-state differential line driver, a differential input receiver, and Analog Devices *iso*Power dc-to-dc converter into a single package. The devices are powered by a single 5 V or 3.3 V supply, realizing a fully integrated signal and power isolated RS-485 solution (see Figure 2).

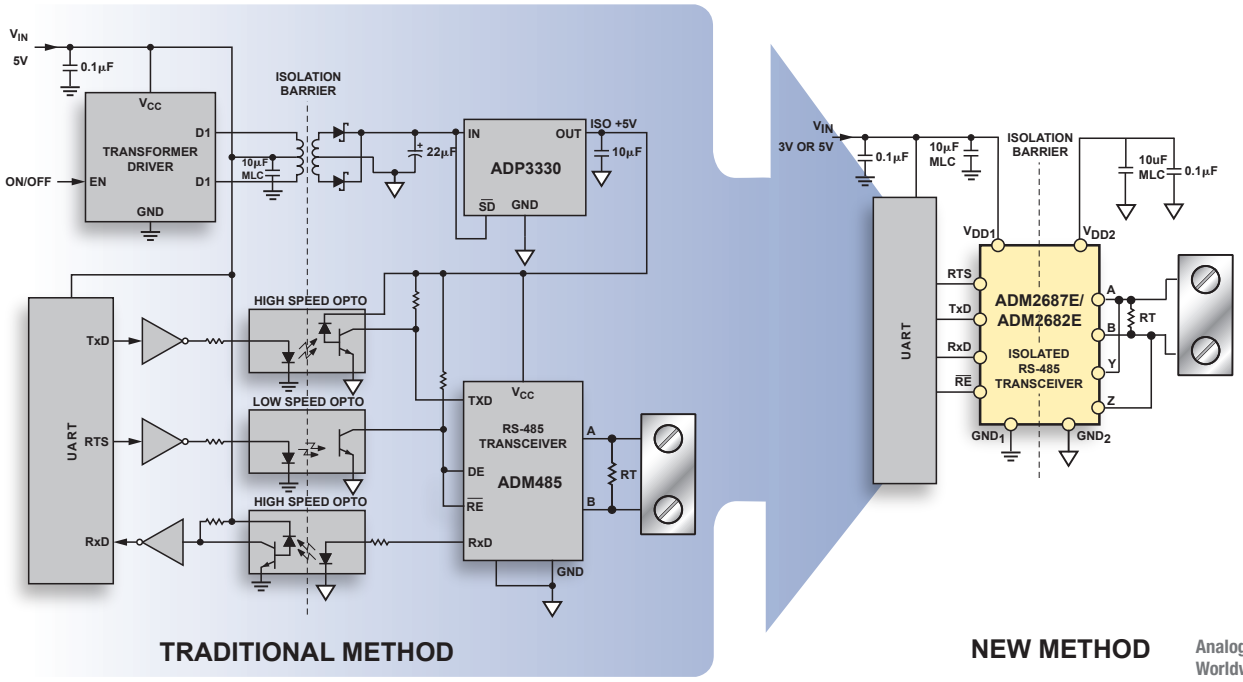


*Figure 2. ADM2682E signal and power isolated RS-485 transceiver.*


**Analog Devices, Inc.**
**Worldwide Headquarters**
Analog Devices, Inc.
One Technology Way
P.O. Box 9106
Norwood, MA 02062-9106
U.S.A.
Tel: 781.329.4700
(800.262.5643,
U.S.A. only)
Fax: 781.461.3113

**Analog Devices, Inc.**
**Europe Headquarters**
Analog Devices, Inc.
Wilhelm-Wagenfeld-Str. 6
80807 Munich
Germany
Tel: 49.89.76903.0
Fax: 49.89.76903.157

**Analog Devices, Inc.**
**Japan Headquarters**
Analog Devices, KK
New Pier Takeshiba
South Tower Building
1-16-1 Kaigan, Minato-ku,
Tokyo, 105-6891
Japan
Tel: 813.5402.8200
Fax: 813.5402.1064

**Analog Devices, Inc.**
**Southeast Asia**
**Headquarters**
Analog Devices
22/F One Corporate Avenue
222 Hu Bin Road
Shanghai, 200021
China
Tel: 86.21.2320.8000
Fax: 86.21.2320.8222



Share this on: facebook twitter

Follow ADI: twitter *twitter.com/adi_news*

©2013 Analog Devices, Inc. All rights reserved.
Trademarks and registered trademarks are the property of their respective owners.



T11796-0-9/13