REVISION HISTORY				
ECO	REV	DESCRIPTION	APPROVED	DATE
—	3	PRODUCTION	Mitchell L.	6-5-12

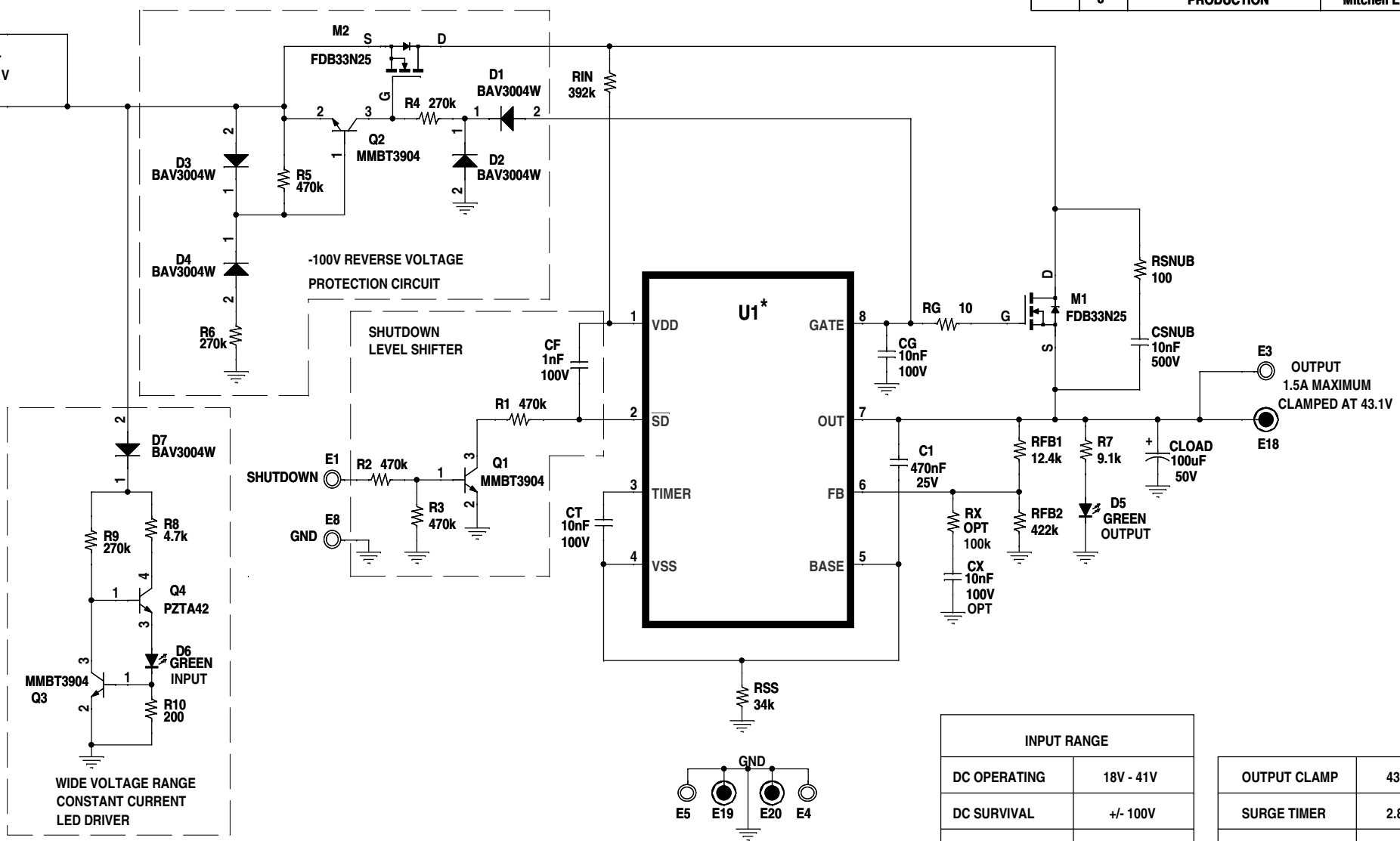

INPUT RANGE	
DC OPERATING	18V - 41V
DC SURVIVAL	+/- 100V
1ms TRANSIENT	250V

OUTPUT CLAMP	43.1V
SURGE TIMER	2.8ms
MAXIMUM LOAD	1.5A

*

ASSY	U1		BEHAVIOR
	PART NUMBER	PART MARKING	
DC1850A-A	LTC4366HTS8-1	LTFMC	LATCH OFF
DC1850A-B	LTC4366HTS8-2	LTFMF	AUTO RETRY

CUSTOMER NOTICE

LINEAR TECHNOLOGY HAS MADE A BEST EFFORT TO DESIGN A CIRCUIT THAT MEETS CUSTOMER-SUPPLIED SPECIFICATIONS; HOWEVER, IT REMAINS THE CUSTOMER'S RESPONSIBILITY TO VERIFY PROPER AND RELIABLE OPERATION IN THE ACTUAL APPLICATION. COMPONENT SUBSTITUTION AND PRINTED CIRCUIT BOARD LAYOUT MAY SIGNIFICANTLY AFFECT CIRCUIT PERFORMANCE OR RELIABILITY. CONTACT LINEAR TECHNOLOGY APPLICATIONS ENGINEERING FOR ASSISTANCE.

THIS CIRCUIT IS PROPRIETARY TO LINEAR TECHNOLOGY AND SUPPLIED FOR USE WITH LINEAR TECHNOLOGY PARTS.

APPROVALS	
PCB DES.	HZ
APP ENG.	Mitchell L.

SCALE = NONE

LINEAR TECHNOLOGY
1630 McCarthy Blvd.
Milpitas, CA 95035
Phone: (408)432-1900 www.linear.com
Fax: (408)434-0507
LTC Confidential-For Customer Use Only

TITLE: SCHEMATIC

VERY HIGH VOLTAGE SURGE STOPPER

SIZE	IC NO.	REV.
N/A	LTC4366HTS8 FAMILY DEMO CIRCUIT 1850A	3

DATE: Wednesday, June 20, 2012 SHEET 1 OF 1